This is a digital copy of a book that was preserved for generations on library shelves before it was carefully scanned by Google as part of a project to make the world's books discoverable online.

It has survived long enough for the copyright to expire and the book to enter the public domain. A public domain book is one that was never subject to copyright or whose legal copyright term has expired. Whether a book is in the public domain may vary country to country. Public domain books are our gateways to the past, representing a wealth of history, culture and knowledge that's often difficult to discover.

Marks, notations and other marginalia present in the original volume will appear in this file - a reminder of this book's long journey from the publisher to a library and finally to you.

Usage guidelines

Google is proud to partner with libraries to digitize public domain materials and make them widely accessible. Public domain books belong to the public and we are merely their custodians. Nevertheless, this work is expensive, so in order to keep providing this resource, we have taken steps to prevent abuse by commercial parties, including placing technical restrictions on automated querying.

We also ask that you:

+ *Make non-commercial use of the files* We designed Google Book Search for use by individuals, and we request that you use these files for personal, non-commercial purposes.
+ *Refrain from automated querying* Do not send automated queries of any sort to Google's system: If you are conducting research on machine translation, optical character recognition or other areas where access to a large amount of text is helpful, please contact us. We encourage the use of public domain materials for these purposes and may be able to help.
+ *Maintain attribution* The Google "watermark" you see on each file is essential for informing people about this project and helping them find additional materials through Google Book Search. Please do not remove it.
+ *Keep it legal* Whatever your use, remember that you are responsible for ensuring that what you are doing is legal. Do not assume that just because we believe a book is in the public domain for users in the United States, that the work is also in the public domain for users in other countries. Whether a book is still in copyright varies from country to country, and we can't offer guidance on whether any specific use of any specific book is allowed. Please do not assume that a book's appearance in Google Book Search means it can be used in any manner anywhere in the world. Copyright infringement liability can be quite severe.

About Google Book Search

Google's mission is to organize the world's information and to make it universally accessible and useful. Google Book Search helps readers discover the world's books while helping authors and publishers reach new audiences. You can search through the full text of this book on the web at `http://books.google.com/`

THE SOCIETY OF AUTOMOBILE ENGINEERS

1914

TRANSACTIONS

PART II

Digitized by Google

Digitized by Google

Digitized by Google

Digitized by Google

THE SOCIETY OF AUTOMOBILE ENGINEERS

1914 TRANSACTIONS

PART II

VOLUME IX

Comprising Papers and Reports and Discussion of Same Presented at the June, 1914, Meeting of the Society, and some Papers Presented during 1914 at Meetings of Sections of the Society.

Copyright, 1914, by
The Society of Automobile Engineers

OFFICE OF THE SOCIETY
1790 BROADWAY, NEW YORK

Digitized by Google

The
Society of Automobile Engineers

Founded 1905 | Incorporated 1909

PAST PRESIDENTS

1905-1907	Andrew L. Riker
1908	Thomas J. Fay
1909	Henry Hess
1910	Howard E. Coffin
1911	Henry Souther
1912	Henry F. Donaldson (deceased)
1912	Herbert W. Alden
1913	Howard Marmon

The Society shall not be responsible for statements or opinions advanced in papers or discussions at its meetings * * *

—(*Constitution, paragraph* 54.)

Digitized by Google

191420
JAN 22 1915
S
.S06
9
2

CONTENTS*

PAGE

An Engineering Basis for Taxation of Motor Vehicles.
C. O. Egerton and S. I. Fekete 174
Autogenous Welding.
H. Sidney Smith 267
Broaches Division, Seventh Report of 1, 64
By-laws as Revised October, 1914 355
Constitution as Revised August, 1914 344
Discussion of Constitutional Amendment 58
Discussion of Lock Washer Standard 46
Electric Gear-Shifting.
W. A. McCarrell 248
Frank N. Nutt 253
Chas. R. Underhill 242
Electric Transmissions for Motor Cars.
Justus B. Entz 129
Electrical Equipment Division, Fifth Report of 17, 67
Gasoline Electric Vehicles 303
Glare-Preventing Devices for Headlights 284
Highest Quality Six-Cylinder Chassis for America.
A. Ludlow Clayden 221
Index to Constitution, By-laws and Rules 362
Iron and Steel Division, Fifth Report of 7, 65
Motor Testing Division, Second Report of 36, 74
Motor Truck Tires.
J. E. Hale 107
Officers of the Society 340
Pleasure Car Wheels Division, Second Report of 25, 74
Pleasure Car Wheel Felloe Band Standardization.
C. C. Carlton 100
Pneumatic Gear-Shifting 258
Power and Performance of Gasoline Motor Trucks.
Cornelius T. Myers 122
Presidential Address 49
Racing and Its Effect on Manufacture.
Finley R. Porter 333
Report of Tellers of Election of Members 55
Rules as Revised October, 1914 361
S. M. M. T. Standard Rims.
E. R. Hall 80
Sections of the Society 341

*General Index to subjects on page 365.

Digitized by Google

(Contents, Continued)

PAGE

STANDARDIZATION OF PNEUMATIC TIRE RIMS.
E. R. Hall 87

STARTING, LIGHTING AND IGNITION SYSTEMS.
Albion D. Libby 149

TAP DRILL SIZES AND CAUSES OF STRIPPED THREADS.
H. E. Harris 194

TENDENCY IN EUROPEAN CAR CONSTRUCTION.
R. W. A. Brewer 230

THE GENERAL TREND IN AMERICAN MOTOR DESIGN.
W. M. Power 327

THE IDEAL AUTOMOBILE 320
A. P. Brush 211
Herbert Chase 219
C. E. Davis 215

THE TENDENCIES IN BODY DESIGN.
Hinsdale Smith 281

TREASURER'S REPORT 55, 240

WOOD WHEELS FOR HEAVY VEHICLES.
C. B. Hayes 264

Digitized by Google

Contributors and Speakers

PAGE

J. A. ANGLADA.....117, 119, 284, 303, 317, 318, 319, 324, 325, 326, 327, 330, 331, 332, 333
B. B. BACHMAN.....77, 119, 120
WALTER C. BAKER.....64, 74, 121, 122
DAVID BEECROFT.....60, 63, 312
B. M. BESKOW..... 306
E. J. BEURET..... 322
JOSEPH BIJUR.....18, 22, 23, 67, 70, 71, 168
E. T. BIRDSALL.....257, 259, 260, 261, 262, 263
L. S. BOWERS 79
J. L. BREESE, JR..... 311
ROBERT W. A. BREWER.....220*
A. B. BROWNE..... 234
A. P. BRUSH.....46, 47, 193, 210, 211*, 234, 239
R. S. BRYANT.....34, 105, 106
W. D. BURFORD.....258, 259, 260, 261, 262
L. G. BUSBY..... 320
C. C. CARLTON.....32, 35, 36, 100*
J. R. CAUTLEY.....233, 307
HERBERT CHASE.....44, 45, 46, 74, 122, 141, 219*, 238, 300, 302, 322, 324, 325, 326, 332, 333
WILLIAM CHURCHILL 294, 301, 302
COKER F. CLARKSON.....55, 60, 62
A. LUDLOW CLAYDEN..... 221*
HOWARD E. COFFIN.....19, 60, 61, 67, 235, 239.
R. H. COMBS..... 280
W. H. CONANT.....18, 19, 23, 63, 68, 69, 71, 73, 74, 166, 167, 254, 255
H. L. CONNELL.....61, 256, 262, 264
A. W. COPELAND..... 259
A. W. COPLEY.....170*, 171, 172
A. B. CUMNER.....55, 62
C. E. DAVIS.....58, 63, 65, 215*, 232, 235, 239
P. P. DEAN..... 320
HARRY E. DEY.....304, 317
GEO. W. DUNHAM..... 260
C. O. EGERTON..... 174*
A. H. EHLE..... 142
E. H. EHRMAN..... 70
JUSTUS B. ENTZ.....129* 139, 140, 141, 142, 143, 144, 145, 146, 147, 148
S. I. FEKETE.....174*, 260
DAVID FERGUSSON 20, 32, 33, 73, 76, 78, 233

*Papers or Written Communications.

Digitized by Google

Contributors and Speakers (Continued)

PAGE

R. J. Firestone....116, 117
Bruce Ford 143
E. R. Fried....258, 261
R. M. Gaston.... 148*
C. P. Grimes.... 280
J. E. Hale....107*, 116, 117, 118, 120, 121
E. R. Hall....31, 32, 33, 34, 76, 77, 78, 80*, 87*, 106
H. E. Harris....194*, 210
Clarence B. Hayes.... 264*
J. O. Heinze....44, 45, 142, 143, 144
W. F. Herst.... 65
Henry Hess 77, 80
P. K. Hexter....314, 316, 317
C. C. Hinkley.... 260
Russell Hoopes 106
Russell Huff 116, 118, 119
Ward Leathers 284
Leonard Kebler 293, 300
Wm. P. Kennedy 309, 322
Henry M. Leland....49*, 55, 59, 61, 62, 63, 64, 67
A. D. Libby 20, 22, 23, 71, 149*, 167, 170, 172, 173
R. McA. Lloyd....59, 70, 73, 141, 147, 168, 192, 308, 310, 313, 316
Allen Loomis 259, 260
Otto Luyties 297, 301
W. A. McCarrell....248*, 256, 257, 258
H. G. McComb....324, 326
C. W. McKinley....23, 24, 34, 45, 46, 47
A. L. McMurtry....24, 72, 73, 169, 238, 298, 300
Norman Macbeth 285
M. R. Machol....306, 307, 309, 312, 332
C. M. Manly....307, 312, 316, 317, 318, 319
Geo. L. Markland, Jr....77, 79, 121
W. C. Marshall.... 308
J. F. Middleton.... 285
F. C. Mock.... 232*
F. E. Moskovics....58, 59, 60, 61, 67, 68, 69, 72, 73, 140, 142, 147, 280
Cornelius T. Myers....115, 120, 121, 122*, 192, 193, 257, 258
R. J. Nightingale.... 170
L. G. Nilson....122, 313, 317
W. T. Norton, Jr.... 62
Frank N. Nutt....253*, 256
H. G. Osburn 73
W. H. Palmer, Jr....19, 23, 144, 145
Orrel A. Parker....76, 80, 326
Alling Parkhurst 305, 306, 307, 308, 311, 317, 318, 319
E. C. Peck....6, 7
N. B. Pope....322, 326, 327, 331, 332

Digitized by Google

Contributors and Speakers (Continued)

PAGE

F. R. Porter 330, 331, 332, 333*, 339
W. M. Power 320, 324, 325, 327*, 330, 331, 332, 333
L. P. Prossen 320, 324, 325, 326
E. V. Rippingille 262
W. H. Roberts 321
Joseph T. Roffy 291
J. E. Schipper 321, 324, 325, 326
A. J. Slade 316
H. W. Slauson 306, 339
Hinsdale Smith 281*
H. Sidney Smith 267*, 280
M. A. Smith 261
C. O. Snyder 116, 145, 146
Henry Souther 7, 15, 16, 18, 19, 22, 23, 25, 32, 33, 34, 35
36, 45, 46, 47, 63, 65, 66, 67, 74, 75, 76, 77
78, 79, 106
C. W. Spicer 6, 7, 47, 64, 65
E. E. Sweet 20, 34
E. J. Thurber 263, 264
H. L. Towle 68, 69, 146
Charles R. Underhill 242*
W. G. Wall 58, 59, 60, 61, 62, 67, 70, 71, 72, 76, 79, 80
115, 117, 118, 119, 139, 280
John Wilkinson 235
H. C. Wilson 61, 63
J. E. Wilson 48*
A. M. Wolf 321
A. C. Woodbury 313, 321, 326
F. C. Wulf 321
K. W. Zimmerschied 16, 74, 192, 193, 210, 232, 235, 236, 237

Digitized by Google

Digitized by Google

SEMI-ANNUAL MEETING OF THE SOCIETY OF AUTOMOBILE ENGINEERS

Held at
Cape May, New Jersey,
June 23-26, 1914

MEETING OF THE STANDARDS COMMITTEE

The meeting was called to order by Chairman Souther.

SEVENTH REPORT OF THE BROACHES DIVISION

(As Accepted)

Following the instructions of the Society at the last January meeting to investigate and report on four-spline practice, your committee would report that a general invitation was issued through the S. A. E. Bulletin for all automobile engineers interested to answer several questions which were proposed in regard to the satisfaction received from their present practice. This was followed up by special letters to the engineers of a selected list of about fifty leading automobile manufacturers. Four questions were asked, as follows:

(1) Do you use four-spline construction?

(2) Is your present design of four-spline shaft entirely satisfactory. If not, why?

(3) Have you any objection to equally dividing the periphery in four-spline construction as has already been done in the case of six- and ten-spline?

(4) If so, why and what proportion do you recommend?

No replies were received excepting from those to whom personal letters were written and only 23 replies were received in response to the 50 letters sent out. Of these, 10 were using four-spline construction and 13 were not. As to the equal division of the periphery, five objected and three were in favor. Of those who objected only two gave the same reason. Two of the reasons given referred to the manufacturing cost.

Digitized by Google

4 SPLINE FITTINGS

PERMANENT FIT

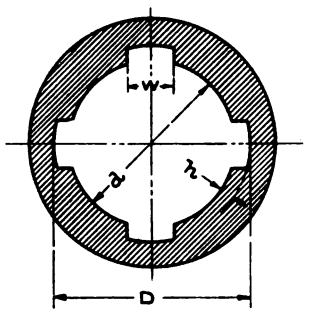

4-A

w = .241 D
h = .075 D
d = .850 D

TO SLIDE WHEN NOT UNDER LOAD

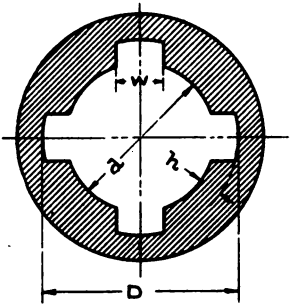

4-B

w = .241 D
h = .125 D
d = .750 D

NOMINAL DIA.	D	d	w	h	T	D	d	w	h	T
3/4	.750 .749	.637 .636	.181 .180	.056 .055	78	.750 .749	.562 .561	.181 .180	.094 .093	123
7/8	.875 .874	.744 .743	.211 .210	.066 .065	107	.875 .874	.656 .655	.211 .210	.109 .108	167
1	1.000 .999	.850 .849	.241 .240	.075 .074	139	1.000 .999	.750 .749	.241 .240	.125 .124	219
1 1/8	1.125 1.124	.956 .955	.271 .270	.084 .083	175	1.125 1.124	.844 .843	.271 .270	.141 .140	277
1 1/4	1.250 1.249	1.062 1.061	.301 .300	.094 .093	217	1.250 1.249	.937 .936	.301 .300	.156 .155	341
1 3/8	1.375 1.374	1.169 1.168	.331 .330	.103 .102	262	1.375 1.374	1.031 1.030	.331 .330	.172 .171	414
1 1/2	1.500 1.499	1.275 1.274	.361 .360	.112 .111	311	1.500 1.499	1.125 1.124	.361 .360	.187 .186	491
1 5/8	1.625 1.624	1.381 1.380	.391 .390	.122 .121	367	1.625 1.624	1.219 1.218	.391 .390	.203 .202	577
1 3/4	1.750 1.749	1.487 1.486	.422 .421	.131 .130	424	1.750 1.749	1.312 1.311	.422 .421	.219 .218	670
2	2.000 1.998	1.700 1.698	.482 .480	.150 .148	555	2.000 1.998	1.500 1.498	.482 .480	.250 .248	875
2 1/4	2.250 2.248	1.912 1.910	.542 .540	.169 .167	703	2.250 2.248	1.687 1.685	.542 .540	.281 .279	1106
2 1/2	2.500 2.498	2.125 2.123	.602 .600	.187 .185	865	2.500 2.498	1.875 1.873	.602 .600	.312 .310	1365
3	3.000 2.998	2.550 2.548	.723 .721	.225 .223	1249	3.000 2.998	2.250 2.248	.723 .721	.375 .373	1969

T = 1000 X 4 X MEAN R X h X l = INCH-POUNDS TORQUE CAPACITY PER INCH BEARING LENGTH AT 1000 LBS. PRESSURE PER SQUARE INCH ON SIDES OF SPLINES. NO ALLOWANCE IS MADE FOR RADII ON CORNERS NOR FOR CLEARANCES.

After careful consideration of the various points brought out in the replies to the questions and of the subject in general, the chief reasons for equal division of the periphery may be summarized as follows:

(1) Uniformity in general design with the six- and ten-spline proportions already accepted.

(2) In the milling operation there would be less material to be removed and surface to be covered; therefore less cost of shaft.

Digitized by Google

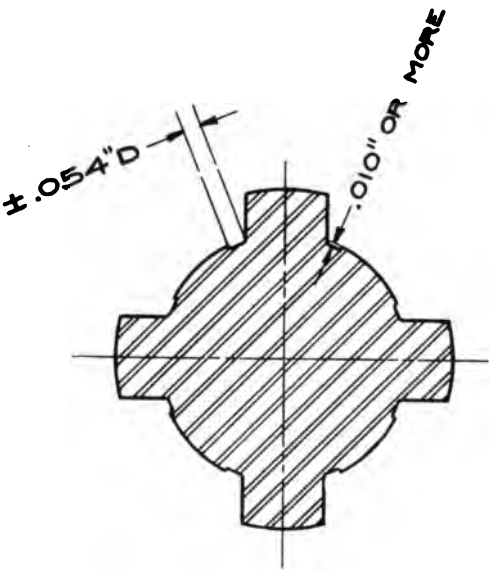

(3) In the grinding operation there would be less surface to be covered; therefore less expense in manufacturing the shaft.

(4) The shaft would be stiffer.

The foregoing enumerated advantages of the equal division appear to the committee to have much less weight than the reasons for unequal division which were as follows:

Unequal division provides:

(1) Larger bearing surface on the small diameter. This is especially important when auxiliary grooves are provided at the root of the spline of the shaft, which grooves are in some cases necessary in order to develop the necessary depth of straight surface on the side of the spline when the spline is developed by the hobbing process. The auxiliary groove is also of advantage when the small diameter of the shaft is finished by grinding, as it obviates the necessity of grinding into a sharp corner.

(2) Lighter shaft.

(3) Less material to be removed by the broach and therefore less expensive broaching operation.

(4) Other things being equal, a gear or other part containing the broached hole would probably go out of shape in heat treating somewhat less if provided with narrow slots than it would with the comparatively wide slots resulting from an equal division of the periphery.

The committee also carefully considered nearly one hundred different designs of four-spline transmission shafts that are being used in 1914 cars in quantities of from 2,500 to 30,000 or more each. No one of these

Digitized by Google

designs seemed to meet all of the required features in *every* particular. If two designs differ in *any* important particular, they are not interchangeable, and even had the committee decided to recommend one of the designs in order to preserve present practice, only the one factory now using that particular design would be affected, for the committee were not able to find that any two factories were using exactly the same design. It may be said, however, that probably more than half of the nearly one hundred designs referred to approximate in most particulars one of the designs shown in the 4-b table.

The principal use of four-spline fittings at the present time is in connection with transmission shafts and as the design arrived at as above described and shown in the 4-b table corresponds very closely in capacity to the 6-b and the 10-a tables already approved, the committee thought it desirable to show also a set of four-spline designs suitable foi permanent fittings and corresponding in capacity to the 6-a table already approved.

Referring to paragraph 1 of the "Advantages of Unequal Division" referred to above, the committee offers herewith a suggested design of shaft. In the proportions given, the circumferential bearing surface of the large diameter and small diameter are approximately the same; in other words, the design is equally suitable for carrying the weight of the gear or other corresponding parts on the large or on the small diameter. The design of the broached holes permits of a shaft of this design or of the heretofore usual design which does not include the auxiliary grooves. The proportions shown for the grooves may of course be modified to suit each engineer's design and factory manufacturing conditions.

The paragraph of the Sixth Report presented at the January, 1914, meeting in reference to "problems considered," "working limits," and "radii at corners" apply with equal force to this report and need not be repeated here.

CASTLE NUT FOR TAPER FITTINGS

Referring to the nut shown on S. A. E., Data Sheets 7 and 7a of Vol. I, and especially to that in connection with the taper fittings, it appears that while some of our members have had satisfactory results from the plain nut shown in the table, others have had some difficulty due to the nut working loose since the cotter-pin does not prevent the nut loosening to some extent. It appears, therefore, that some provision should be made for a castle nut.

The new table submitted herewith is identical with Data Sheet 7a with the exception that the symbol at the top of the ninth column is changed from *Tn* to *E*, the data in that column remaining as before except for two minor corrections on the second and third lines and a new column being added for *Tn*. Also, to allow of more easily lining up the cotter-pin slots and hole, the dimension *C* has been increased by 1/32" throughout. In other words, the data given are identical in the two instances excepting that the new column *Tn* is added and the dimension *C* is increased 1/32".

It should also be noted that the castle nut shown is in every case strictly

Digitized by Google

TAPER FITTINGS

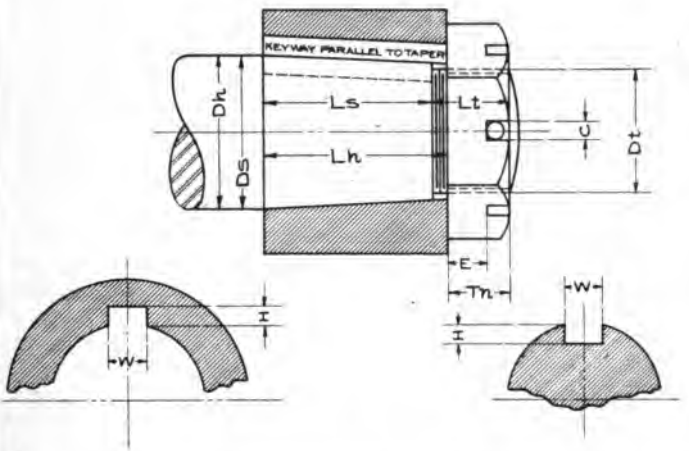

Nominal Dia.	TAPER $1\frac{1}{2}$ IN 12													
	Ds SHAFT	Dh HOLE	Ls	Lh	Lt	Dt	Threads per inch	E	Tn	Short dia. of nut	W	H	SQUARE KEY	C
$\frac{1}{4}$	.250 .249	.248 .247	$\frac{5}{16}$	$\frac{3}{8}$	$\frac{5}{16}$	$\frac{3}{16}$	32	$\frac{5}{32}$	$\frac{1}{4}$	$\frac{9}{32}$	.0625 .0620	.0337 .0327	.0635 .0630	$\frac{3}{32}$
$\frac{3}{8}$	.375 .374	.373 .372	$\frac{7}{16}$	$\frac{1}{2}$	$\frac{7}{16}$	$\frac{5}{16}$	24	$\frac{15}{64}$	$\frac{3}{8}$	$\frac{1}{2}$	.0937 .0932	.0494 .0484	.0947 .0942	$\frac{7}{64}$
$\frac{1}{2}$	.500 .499	.498 .497	$\frac{11}{16}$	$\frac{3}{4}$	$\frac{7}{16}$	$\frac{5}{16}$	24	$\frac{15}{64}$	$\frac{3}{8}$	$\frac{1}{2}$	.1250 .1245	.0650 .0640	.1260 .1255	$\frac{7}{64}$
$\frac{5}{8}$	.625 .624	.623 .622	$\frac{11}{16}$	$\frac{3}{4}$	$\frac{1}{2}$	$\frac{1}{2}$	20	$\frac{1}{4}$	$\frac{7}{16}$	$\frac{3}{4}$	.1562 .1557	.0806 .0796	.1572 .1567	$\frac{1}{8}$
$\frac{3}{4}$	.750 .749	.748 .747	$\frac{15}{16}$	1	$\frac{1}{2}$	$\frac{1}{2}$	20	$\frac{1}{4}$	$\frac{7}{16}$	$\frac{3}{4}$	.1875 .1870	.0963 .0953	.1885 .1880	$\frac{1}{8}$
$\frac{7}{8}$	.875 .874	.873 .872	$1\frac{1}{8}$	$1\frac{1}{4}$	$\frac{5}{8}$	$\frac{5}{8}$	20	$\frac{5}{16}$	$\frac{1}{2}$	1	.2500 .2490	.1275 .1265	.2510 .2505	$\frac{5}{32}$
1	1.001 .999	.997 .995	$1\frac{3}{8}$	$1\frac{1}{2}$	$\frac{5}{8}$	$\frac{3}{4}$	20	$\frac{5}{16}$	$\frac{1}{2}$	1	.2500 .2490	.1275 .1265	.2510 .2505	$\frac{5}{32}$
$1\frac{1}{8}$	1.126 1.124	1.122 1.120	$1\frac{3}{8}$	$1\frac{1}{2}$	$\frac{5}{8}$	$\frac{3}{4}$	20	$\frac{5}{16}$	$\frac{1}{2}$	1	.3125 .3115	.1610 .1590	.3140 .3130	$\frac{5}{32}$
$1\frac{1}{4}$	1.251 1.249	1.247 1.245	$1\frac{3}{8}$	$1\frac{1}{2}$	$\frac{5}{8}$	1	20	$\frac{5}{16}$	$\frac{1}{2}$	$1\frac{1}{2}$	.3125 .3115	.1610 .1590	.3140 .3130	$\frac{5}{32}$
$1\frac{3}{8}$	1.376 1.374	1.372 1.370	$1\frac{7}{8}$	2	$\frac{5}{8}$	1	20	$\frac{5}{16}$	$\frac{1}{2}$	$1\frac{1}{2}$	.3750 .3740	.1925 .1905	.3765 .3755	$\frac{5}{32}$
$1\frac{1}{2}$	1.501 1.499	1.497 1.495	$1\frac{7}{8}$	2	$\frac{5}{8}$	1	20	$\frac{5}{16}$	$\frac{1}{2}$	$1\frac{1}{2}$	.3750 .3740	.1925 .1905	.3765 .3755	$\frac{5}{32}$
$1\frac{3}{4}$	1.751 1.749	1.747 1.745	$2\frac{1}{8}$	$2\frac{1}{4}$	$\frac{3}{4}$	$1\frac{1}{4}$	18	$\frac{7}{16}$	$\frac{5}{8}$	$2\frac{1}{8}$	.4375 .4365	.2237 .2217	.4390 .4380	$\frac{5}{32}$
2	2.001 1.999	1.997 1.995	$2\frac{7}{8}$	3	$\frac{3}{4}$	$1\frac{1}{4}$	18	$\frac{7}{16}$	$\frac{5}{8}$	$2\frac{1}{8}$	.5000 .4990	.2550 .2530	.5015 .5005	$\frac{5}{32}$
$2\frac{1}{4}$	2.252 2.248	2.245 2.242	$2\frac{7}{8}$	3	$\frac{3}{4}$	$1\frac{1}{4}$	18	$\frac{7}{16}$	$\frac{5}{8}$	$2\frac{1}{8}$	.5625 .5610	.2962 .2912	.5645 .5630	$\frac{5}{32}$
$2\frac{1}{2}$	2.502 2.498	2.495 2.492	$3\frac{3}{8}$	$3\frac{1}{2}$	$1\frac{1}{8}$	2	16	$\frac{5}{8}$	1	$3\frac{1}{8}$	.6250 .6235	.3275 .3225	.6270 .6255	$\frac{7}{32}$
$2\frac{3}{4}$	2.752 2.748	2.745 2.742	$3\frac{3}{8}$	$3\frac{1}{2}$	$1\frac{1}{8}$	2	16	$\frac{5}{8}$	1	$3\frac{1}{8}$	.6875 .6860	.3587 .3537	.6895 .6880	$\frac{7}{32}$
3	3.002 2.998	2.995 2.992	$3\frac{7}{8}$	4	$1\frac{1}{8}$	2	16	$\frac{5}{8}$	1	$3\frac{1}{8}$	.7500 .7485	.3900 .3850	.7520 .7505	$\frac{7}{32}$
$3\frac{1}{2}$	3.502 3.498	3.495 3.492	$4\frac{3}{8}$	$4\frac{1}{2}$	$1\frac{1}{4}$	$2\frac{1}{2}$	14	$\frac{3}{4}$	$1\frac{1}{8}$	$3\frac{7}{8}$	.8750 .8735	.4525 .4475	.8770 .8755	$\frac{9}{32}$
4	4.002 3.998	3.995 3.992	$5\frac{3}{8}$	$5\frac{1}{2}$	$1\frac{1}{4}$	$2\frac{1}{2}$	14	$\frac{3}{4}$	$1\frac{1}{8}$	$3\frac{7}{8}$	1.0000 .9985	.5150 .5100	1.0020 1.0005	$\frac{9}{32}$

Accepted Additional Table

Digitized by Google

interchangeable with the plain nut shown on 7a; that is, the shaft-end would be exactly the same regardless of which nut was used. This form of castle nut is already in use by the Timken-Detroit Axle Company and others. Conservative practice seems to demand the castle nut in many instances. The Broaches Division recommend that this be shown in data sheet form. They wish to be instructed by the Standards Committee or the Society or both as to whether the table showing the castle nut shall be shown *in addition* to the present tables, thus giving an alternative, *or* whether for conservative reasons the castle nut shall be approved as recommended practice in all cases and the table referring to the same *substituted* for that now on data sheet 7 of square fittings and 7a of taper fittings.*

Respectfully submitted,

BROACHES DIVISION,

C. W. Spicer, *Chairman.*

DISCUSSION

FOUR-SPLINE PRACTICE

CHAIRMAN SOUTHER:—Gentlemen, you understand the procedure, which is for this committee to hear the report and pass it to the Society during the coming convention or not, as it sees fit. What I want to bring out at this meeting this afternoon is all the comments and all the discussion on this subject of broaches that is possible, so that when it comes before the Society meeting this week all will know just what we are talking about and be able to complete the discussion in a short space of time.

This matter of broaches has been under consideration ever since the beginning of the work of the Standards Committee. Chairman Spicer and the other members of the Broaches Division have spent a great deal of time on it, with the result that it is pretty well simplified.

C. W. SPICER:—The Division appreciates the fact that no radical changes should be made and I think the point is brought out in the report on four-spline practice that the designs offered are different only in minor details from about 100 different designs which are in use in 1914 cars, of which 2,500 is the minimum quantity and from that up to 30,000 or more pieces of a kind. Therefore, the designs recommended will very closely approximate current practice. It seems impossible to find any two manufacturers who are using just the same design at the present time. I think the broach people will bear me out in that.

E. C. PECK:—I think we do not manufacture broaches enough to have this recommendation affect us one way or another. The standard as proposed can be plus or minus the regular limits as well as any other. I see no objection at all to the dimensions as set forth in the report.

*At the June, 1914, meeting of the Society a vote was passed accepting the recommended table as to castle nut as *additional* practice.

Digitized by Google

CHAIRMAN SOUTHER:—I understand that if this report appears in our data sheets and our engineers and draftsmen follow it, you are perfectly willing to make broaches according to it.

E. C. PECK:—Yes.

CHAIRMAN SOUTHER:—If these designs are found in the data book and then are actually and increasingly made, they will become popular and correspondingly cheap. Although they may not represent the idea of every engineer, they are an exceedingly good illustration of the art, as I understand it.

E. E. SWEET:—It seems to me that the Division has investigated the subject very thoroughly. I think the report should be accepted by the Society.

C. W. SPICER:—Four splines are used mainly in transmissions; that is, they are not used, so far as the committee know, for other purposes, for example in telescoping joints in propeller-shafts. They may be used to some extent in the rear axle shaft in connection with bevel gears, but so far as we were able to learn, our information being quite largely from the broach people, they are not used so extensively at the present time.

CHAIRMAN SOUTHER:—The question is whether to place this report before the Council and the Society for acceptance. Are you ready for the question?

(Upon motion, duly made and seconded, the question was put to a vote and carried.)

FIFTH REPORT OF THE IRON AND STEEL DIVISION

(As Accepted)

SPECIFICATION NUMBERS

We recommend that the numeral index system specified in our Third Report, accepted at the January, 1912, meeting of the Society (see S. A. E Transactions, Vol. 7, Part I, page 32), be modified to the extent of eliminating the use of the hyphen between numbers, the specification number for .10 carbon steel, for example, becoming 1010 instead of 10-10.

CARBON STEELS

We recommend that steels 1030, 1040, 1050 and 1080 be eliminated and that three new carbon steels, to be numbered 1025, 1035 and 1045 (specified hereinafter) be accepted.

We further recommend that the phosphorus and sulphur content of the carbon steels be specified as .045 per cent. and .05 per cent., respectively, except in the case of steel 1095, in which case we recommend that the phosphorus content remain as heretofore, namely, .04 per cent. Also

Digitized by Google

that the manganese content of steel No. 1020 be specified as .30 to .60 per cent. (.45 per cent. desired), instead of .50 to .80 per cent. (.65 per cent. desired).

NICKEL STEELS

We recommend that steels 2325, 2345 and 2350 be eliminated. Also that the sulphur content of the nickel steels be specified as .045 per cent.

NICKEL CHROMIUM STEELS

We recommend that the classification of nickel chromium steels into "low," "medium" and "high," be discontinued. Also that steels 3115, 3145, 3150, 3215, 3220, 3225, 3230, 3235, 3245, 3315, 3325, 3330, 3335 and 3345 be eliminated. And that three new nickel chromium steels, to be numbered X3315, X3335 and X3350 (specified hereinafter), be accepted.

Also that the low limit of chromium in steels 3120, 3125, 3130, 3135 and 3140 be specified as .45 per cent. And that in these five last mentioned steels the sulphur content be specified as .045 per cent., the phosphorus content remaining as heretofore, namely, .04 per cent. Also that the chromium content in steels 3240 and 3250 be specified as .90 to 1.25 per cent. (1.10 per cent. preferred).

NICKEL CHROMIUM VANADIUM STEELS

We recommend that steels 4115, 4120, 4125, 4130, 4135, 4140, 4145, 4150 and 4215, 4220, 4225, 4230, 4235, 4240, 4245 and 4250 be eliminated.

CHROMIUM STEELS

We recommend that three new chromium steels, to be numbered 5120, 5140 and 5165 (specified hereinafter), be accepted.

CHROMIUM VANADIUM STEELS

We recommend that steel 6115 be eliminated.

The effect of the acceptance by the Society of the above stated recommendations would be to make the specifications for S. A. E. steels as appears hereinbelow, all other previously recommended and accepted steels being eliminated.*

CARBON STEELS

SPECIFICATION No. 1010

Carbon	.05% to .15%	(.10% desired)
Manganese	.30% to .60%	(.45% desired)
Phosphorus, not to exceed	.045%	
Sulphur, not to exceed	.05%	

*The Iron and Steel Division recommends in this report the continuance and acceptance of 42 steels. Of these 42, 9 are recommended for the first time in this report, which also recommends the elimination of 41 steels previously recommended by the Iron and Steel Division and accepted by the Society. (See S. A. E. Transactions, Vol. 7, Part I, page 32, January, 1912, and Vol. 8, Part II, page 7, June, 1913.)

Digitized by Google

SPECIFICATION No. 1020

Carbon	.15% to .25%	(.20% desired)
Manganese	.30% to .60%	(.45% desired)
Phosphorus, not to exceed	.045%	
Sulphur, not to exceed	.05%	

SPECIFICATION No. 1025

Carbon	.20% to .30%	(.25% desired)
Manganese	.50% to .80%	(.65% desired)
Phosphorus, not to exceed	.045%	
Sulphur, not to exceed	.05%	

SPECIFICATION No. 1035

Carbon	.30% to .40%	(.35% desired)
Manganese	.50% to .80%	(.65% desired)
Phosphorus, not to exceed	.045%	
Sulphur, not to exceed	.05%	

SPECIFICATION No. 1045

Carbon	.40% to .50%	(.45% desired)
Manganese	.50% to .80%	(.65% desired)
Phosphorus, not to exceed	.045%	
Sulphur, not to exceed	.05%	

SPECIFICATION No. 1095

Carbon	.90% to 1.05%	(.95% desired)
Manganese	.25% to .50%	(.35% desired)
Phosphorus, not to exceed	.04%	
Sulphur, not to exceed	.05%	

SCREW STOCK

SPECIFICATION No. 1114

Carbon	.08% to .20%
Manganese	.30% to .80%
Phosphorus, not to exceed	.12%
Sulphur	.06% to .12%

STEEL CASTINGS

SPECIFICATION No. 1235

Carbon	.30% to .40%	(.35% desired)
Manganese	.50% to .80%	(.65% desired)
Phosphorus, not to exceed	.05%	
Sulphur, not to exceed	.05%	
Silicon	.10% to .30%	

Digitized by Google

NICKEL STEELS

SPECIFICATION No. 2315

Carbon	.10%	to	.20%	(.15% desired)
Manganese	.50%	to	.80%	(.65% desired)
Phosphorus, not to exceed			.04%	
Sulphur, not to exceed			.045%	
Nickel	3.25%	to	3.75%	(3.50% desired)

SPECIFICATION No. 2320

Carbon	.15%	to	.25%	(.20% desired)
Manganese	.50%	to	.80%	(.65% desired)
Phosphorus, not to exceed			.04%	
Sulphur, not to exceed			.045%	
Nickel	3.25%	to	3.75%	(3.50% desired)

SPECIFICATION No. 2330

Carbon	.25%	to	.35%	(.30% desired)
Manganese	.50%	to	.80%	(.65% desired)
Phosphorus, not to exceed			.04%	
Sulphur, not to exceed			.045%	
Nickel	3.25%	to	3.75%	(3.50% desired)

SPECIFICATION No. 2335

Carbon	.30%	to	.40%	(.35% desired)
Manganese	.50%	to	.80%	(.65% desired)
Phosphorus, not to exceed			.04%	
Sulphur, not to exceed			.045%	
Nickel	3.25%	to	3.75%	(3.50% desired)

SPECIFICATION No. 2340

Carbon	.35%	to	.45%	(.40% desired)
Manganese	.50%	to	.80%	(.65% desired)
Phosphorus, not to exceed			.04%	
Sulphur, not to exceed			.045%	
Nickel	3.25%	to	3.75%	(3.50% desired)

NICKEL CHROMIUM STEELS

SPECIFICATION No. 3120

Carbon	.15%	to	.25%	(.20% desired)
Manganese	.50%	to	.80%	(.65% desired)
Phosphorus, not to exceed			.04%	
Sulphur, not to exceed			.045%	
Nickel	1.00%	to	1.50%	(1.25% desired)
Chromium*	.45%	to	.75%	(.60% desired)

*Another grade of this type of steel is available with chromium content of .15 per cent. to .45 per cent. The physical properties of this grade are somewhat lower than those of the grade with the chromium content indicated in specifications Nos. 3120, 3125, 3130, 3135 and 3140.

Digitized by Google

SPECIFICATION No. 3125

Carbon	.20% to .30%	(.25% desired)
Manganese	.50% to .80%	(.65% desired)
Phosphorus, not to exceed	.04%	
Sulphur, not to exceed	.045%	
Nickel	1.00% to 1.50%	(1.25% desired)
Chromium*	.45% to .75%	(.60% desired)

SPECIFICATION No. 3130

Carbon	.25% to .35%	(.30% desired)
Manganese	.50% to .80%	(.65% desired)
Phosphorus, not to exceed	.04%	
Sulphur, not to exceed	.045%	
Nickel	1.00% to 1.50%	(1.25% desired)
Chromium*	.45% to .75%	(.60% desired)

SPECIFICATION No. 3135

Carbon	.30% to .40%	(.35% desired)
Manganese	.50% to .80%	(.65% desired)
Phosphorus, not to exceed	.04%	
Sulphur, not to exceed	.045%	
Nickel	1.00% to 1.50%	(1.25% desired)
Chromium*	.45% to .75%	(.60% desired)

SPECIFICATION No. 3140

Carbon	.35% to .45%	(.40% desired)
Manganese	.50% to .80%	(.65% desired)
Phosphorus, not to exceed	.04%	
Sulphur, not to exceed	.045%	
Nickel	1.00% to 1.50%	(1.25% desired)
Chromium*	.45% to .75%	(.60% desired)

SPECIFICATION No. 3220

Carbon	.15% to .25%	(.20% desired)
Manganese	.30% to .60%	(.45% desired)
Phosphorus, not to exceed	.04%	
Sulphur, not to exceed	.04%	
Nickel	1.50% to 2.00%	(1.75% desired)
Chromium	.90% to 1.25%	(1.10% desired)

SPECIFICATION No. 3230

Carbon	.25% to .35%	(.30% desired)
Manganese	.30% to .60%	(.45% desired)
Phosphorus, not to exceed	.04%	
Sulphur, not to exceed	.04%	
Nickel	1.50% to 2.00%	(1.75% desired)
Chromium	.90% to 1.25%	(1.10% desired)

*Another grade of this type of steel is available with chromium content of .15 per cent. to .45 per cent. The physical properties of this grade are somewhat lower than those of the grade with the chromium content indicated in specifications Nos. 3120, 3125, 3130, 3135 and 3140.

Digitized by Google

SPECIFICATION No. 3240

Carbon	.35% to .45%	(.40% desired)
Manganese	.30% to .60%	(.45% desired)
Phosphorus, not to exceed	.04%	
Sulphur, not to exceed	.04%	
Nickel	1.50% to 2.00%	(1.75% desired)
Chromium	.90% to 1.25%	(1.10% desired)

SPECIFICATION No. 3250

Carbon	.45% to .55%	(.50% desired)
Manganese	.30% to .60%	(.45% desired)
Phosphorus, not to exceed	.04%	
Sulphur, not to exceed	.04%	
Nickel	1.50% to 2.00%	(1.75% desired)
Chromium	.90% to 1.25%	(1.10% desired)

SPECIFICATION No. X3315

Carbon	.10% to .20%	(.15% desired)
Manganese	.45% to .75%	(.60% desired)
Phosphorus, not to exceed	.04%	
Sulphur, not to exceed	.04%	
Nickel	2.75% to 3.25%	(3.00% desired)
Chromium	.60% to .95%	(.80% desired)

SPECIFICATION No. X3335

Carbon	.30% to .40%	(.35% desired)
Manganese	.45% to .75%	(.60% desired)
Phosphorus, not to exceed	.04%	
Sulphur, not to exceed	.04%	
Nickel	2.75% to 3.25%	(3.00% desired)
Chromium	.60% to .95%	(.80% desired)

SPECIFICATION No. X3350

Carbon	.45% to .55%	(.50% desired)
Manganese	.45% to .75%	(.60% desired)
Phosphorus, not to exceed	.04%	
Sulphur, not to exceed	.04%	
Nickel	2.75% to 3.25%	(3.00% desired)
Chromium	.60% to .95%	(.80% desired)

SPECIFICATION No. 3320

Carbon	.15% to .25%	(.20% desired)
Manganese	.30% to .60%	(.45% desired)
Phosphorus, not to exceed	.04%	
Sulphur, not to exceed	.04%	
Nickel	3.25% to 3.75%	(3.50% desired)
Chromium	1.25% to 1.75%	(1.50% desired)

Digitized by Google

SPECIFICATION No. 3340

Carbon	.35% to .45%	(.40% desired)
Manganese	.30% to .60%	(.45% desired)
Phosphorus, not to exceed	.04%	
Sulphur, not to exceed	.04%	
Nickel	3.25% to 3.75%	(3.50% desired)
Chromium	1.25% to 1.75%	(1.50% desired)

CHROMIUM STEELS

SPECIFICATION No. 5120

Carbon	.15% to .25%	(.20% desired)
Manganese*		
Phosphorus, not to exceed	.04%	
Sulphur, not to exceed	.045%	
Chromium	.65% to .85%	(.75% desired)

SPECIFICATION No. 5140

Carbon	.35% to .45%	(.40% desired)
Manganese*		
Phosphorus, not to exceed	.04%	
Sulphur, not to exceed	.045%	
Chromium	.65% to .85%	(.75% desired)

SPECIFICATION No. 5165

Carbon	.60% to .70%	(.65% desired)
Manganese*		
Phosphorus, not to exceed	.04%	
Sulphur, not to exceed	.045%	
Chromium	.65% to .85%	(.75% desired)

SPECIFICATION No. 5195

Carbon	.90% to 1.05%	(.95% desired)
Manganese	.20% to .45%	(.35% desired)
Phosphorus, not to exceed	.03%	
Sulphur, not to exceed	.03%	
Chromium	.90% to 1.10%	(1.00% desired)

SPECIFICATION No. 51120

Carbon	1.10% to 1.30%	(1.20% desired)
Manganese	.20% to .45%	(.35% desired)
Phosphorus, not to exceed	.03%	
Sulphur, not to exceed	.03%	
Chromium	.90% to 1.10%	(1.00% desired)

*Two types of steel are available in this class, viz., one with manganese .25 to .50 per cent. (.35 per cent. desired), and silicon not over .20 per cent.; the other with manganese .60 to .80 per cent. (.70 per cent. desired), and silicon .15 to .50 per cent.

Digitized by Google

SPECIFICATION No. 5295

Carbon	.90% to 1.05%	(.95% desired)
Manganese	.20% to .45%	(.35% desired)
Phosphorus, not to exceed	.03%	
Sulphur, not to exceed	.03%	
Chromium	1.10% to 1.30%	(1.20% desired)

SPECIFICATION No. 52120

Carbon	1.10% to 1.30%	(1.20% desired)
Manganese	.20% to .45%	(.35% desired)
Phosphorus, not to exceed	.03%	
Sulphur, not to exceed	.03%	
Chromium	1.10% to 1.30%	(1.20% desired)

CHROMIUM VANADIUM STEELS

SPECIFICATION No. 6120

Carbon	.15% to .25%	(20% desired)
Manganese	.50% to .80%	(.65% desired)
Phosphorus, not to exceed	.04%	
Sulphur, not to exceed	.04%	
Chromium	.70% to 1.10%	(.90% desired)
Vanadium, not less than	.12%	(.18% desired)

SPECIFICATION No. 6125

Carbon	.20% to .30%	(25% desired)
Manganese	.50% to .80%	(.65% desired)
Phosphorus, not to exceed	.04%	
Sulphur, not to exceed	.04%	
Chromium	.70% to 1.10%	(.90% desired)
Vanadium, not less than	.12%	(.18% desired)

SPECIFICATION No. 6130

Carbon	.25% to .35%	(.30% desired)
Manganese	.50% to .80%	(.65% desired)
Phosphorus, not to exceed	.04%	
Sulphur, not to exceed	.04%	
Chromium	.70% to 1.10%	(.90% desired)
Vanadium, not less than	.12%	(.18% desired)

SPECIFICATION No. 6135

Carbon	.30% to .40%	(.35% desired)
Manganese	.50% to .80%	(.65% desired)
Phosphorus, not to exceed	.04%	
Sulphur, not to exceed	.04%	
Chromium	.70% to 1.10%	(.90% desired)
Vanadium, not less than	.12%	(.18% desired)

Digitized by Google

SPECIFICATION No. 6140

Carbon	.35% to .45%	(.40% desired)
Manganese	.50% to .80%	(.65% desired)
Phosphorus, not to exceed	.04%	
Sulphur, not to exceed	.04%	
Chromium	.70% to 1.10%	(.90% desired)
Vanadium, not less than	.12%	(.18% desired)

SPECIFICATION No. 6145

Carbon	.40% to .50%	(.45% desired)
Manganese	.50% to .80%	(.65% desired)
Phosphorus, not to exceed	.04%	
Sulphur, not to exceed	.04%	
Chromium	.70% to 1.10%	(.90% desired)
Vanadium, not less than	.12%	(.18% desired)

SPECIFICATION No. 6150

Carbon	.45% to .55%	(.50% desired)
Manganese	.50% to .80%	(.65% desired)
Phosphorus, not to exceed	.04%	
Sulphur, not to exceed	.04%	
Chromium	.70% to 1.10%	(.90% desired)
Vanadium, not less than	.12%	(.18% desired)

SPECIFICATION No. 6195

Carbon	.90% to 1.05%	(.95% desired)
Manganese	.20% to .45%	(.35% desired)
Phosphorus, not to exceed	.03%	
Sulphur, not to exceed	.03%	
Chromium	.90% to 1.10%	(1.00% desired)
Vanadium, not less than	.12%	(.18% desired)

SILICO-MANGANESE STEEL

SPECIFICATION No. 9250

Carbon	.45% to .55%	(.50% desired)
Manganese	.60% to .80%	(.70% desired)
Phosphorus, not to exceed	.04%	
Sulphur, not to exceed	.04%	
Silicon	1.75% to 2.00%	(1.90% desired)

DISCUSSION

CHAIRMAN SOUTHER:—Vice-president Zimmerschied will present the fifth report of the Iron and Steel Division, inasmuch as in my absence he presided at the last meeting of the Division.

Digitized by Google

K. W. ZIMMERSCHIED:—The fifth report of the Iron and Steel Division is quite brief as compared with its predecessors, and consists mainly in a revision of the previous report, minor changes in some analyses, and a great many eliminations.

Our original series of analyses covered almost every species and variety of alloy steel which could be demanded by automobile engineers. After the lapse of two years, however, we have found that many of these steels are not commonly used, and that their presence in our list of standard compositions only tends to complicate the situation for many engineers rather than simplify it. The committee has therefore eliminated the analyses of those steels which in its judgment are of least value to the industry as a whole.

IMPURITY CONTENT

Concerning the increase in sulphur that has been allowed, it should be explained that this has been due to the changes which have come in commercial steel practice today. Under conditions which have been growing on the steel mills for the past five years it is difficult to the point of impossibility to make steel commercially in the open-hearth furnace from commercial raw material and keep it consistently inside our old upper limit of .040 sulphur without being forced to charge an extra price for such material.

With regard to nickel chromium steels, we had a class called "low nickel-chromium," which ran .15 per cent. to .45 per cent. chromium. This amount of chromium has been shown in actual practice to be too little to give an adequate return for the increase in price, so that the higher grade, which has the range of .45 per cent to .75 per cent., has been chosen as standard.

With regard to silico-manganese spring steel, we have had considerable discussion in the Division and in a former Standards Committee meeting as to the desirable limits for sulphur, phosphorus and silicon. We have considered the contention that very stringent limits should be established for these elements, but the Division has ruled, as in so many similar cases, that we should aim to supply a good commercial material as standard, leaving ultra refinements to those whose problems or conditions are such as to warrant or demand such treatment. The recommended analysis is acceptable to all parties save one.

CHAIRMAN SOUTHER:—Is there not something we should refer to the Division as new matter? The firm of I. G. Johnson and Company ask that instead of one specification for steel castings we have five or six to cover the whole field. It has been our desire to keep the specifications as simple as possible, but here is a request which we must take up in committee with a good deal of care. Unless there is some objection I would like to let that matter go to the committee before presenting it to the Society as a whole.

Gentlemen, you have heard the report by Mr. Zimmerschied. Are there any phases of it which you care to discuss? Does any one want to find out why we raised the limits of phosphorus and sulphur more definitely

Digitized by Google

than as stated by Mr. Zimmerschied? I will say in explanation that as time goes on the commercial situation changes a little, and further our practical knowledge of the practical effect of differences in elements or metalloids is sometimes quite changed. We know now that with proper heat treatment and proper handling the limits we have set will produce very good motor car parts. The committee has not selected the purest possible steel that can be purchased in the world to recommend as a standard, because if we did prices would be prohibitive. It has chosen a practical limit. The standard does not say that a member cannot specify a lower degree of impurity and therefore a purer steel. Many do. It is quite necessary in some arts. That question will have to come up, as it has come up again and again, not only in this committee and this Society, but in the Society for Testing Materials, in the Institute of Mining Engineers and in one of the associations of steel makers. I would like to have the matter discussed and understood fully by those members present. Are there any remarks? Are you ready for the question?

The question is, shall this report as read by Mr. Zimmerschied and as printed be submitted to the Council for approval and thence to the Society if approved by the Council.

Those in favor signify by saying "aye," those opposed "no." It is a vote.

FIFTH REPORT OF ELECTRICAL EQUIPMENT DIVISION

Whereas the Electrical Equipment Division has spent considerable time in studying the trend of design, and as the trend of design with regard to the points specified below is clear, the following recommendations are made:

TEMPERATURE TEST OF INSULATING MATERIALS OF ELECTRICAL APPARATUS ON GASOLINE AUTOMOBILES

All insulating material used in connection plugs, sockets and similar devices of electrical apparatus for use on gasoline automobiles shall be capable of withstanding for thirty minutes a temperature of 300° F.*

WIRING SYSTEM

The single-wire system with grounded return shall be recommended practice.†

Respectfully submitted.

ELECTRICAL EQUIPMENT DIVISION,

Andrew L. Riker, *Chairman.*

*Accepted at the 1914 Summer meeting of the Society.
†Not accepted at the 1914 Summer meeting of the Society.

Digitized by Google

DISCUSSION

JOSEPH BIJUR:—My personal opinion is that the members of the Division are still somewhat divided; that those in favor of two wires would not really object strenuously to the attempt to get together on some standard, and that those who favor the single wire think it would be greatly in the interest of the automobile art to have only one style of fitting made necessary, feeling that having a single wire would permit very much better fitting than with two wires. The standardization of the single-wire system in the comparatively early stage of its use must be more or less a matter of opinion rather than a matter of experience. I think, Mr. Chairman, that is all I can say that will throw any light on that part of the report in presenting it in Chairman Riker's absence.

As to that portion of the report which deals with the temperature test, I do not know of any difference of opinion in the Electrical Equipment Division.

CHAIRMAN SOUTHER:—Gentlemen, you have before you a very brief report and a very important one, apparently. One thing we must bear in mind all the time, is this: Anything we adopt today as recommended practice may not be adopted by the industry at large tomorrow, but may be worked toward in designs in the future. Anything that is recommended today does not have to be carried out tomorrow, so to speak. I think there is a great deal of feeling among the members who have not stopped to think about it very much or who have not been to very many committee meetings, that if a part is to be adopted it has to be adopted today or tomorrow. Nothing of the kind. If it stands in our Data Book and Transactions, it is a suggestion for all to follow if they think it is a good one. If it is not a good one, it will certainly not be followed. If it is a good one it becomes common practice and is then taken as the real standard.

It is recommended in the report that the single-wire system with grounded returns shall be recommended practice.

W. H. CONANT:—Perhaps I can say a word or two that will show you the committee's frame of mind. At the first meeting at which the subject under discussion came up, five of us were present, two of whom represented manufacturers of cars and two makers of electrical equipment. They appeared to be, perhaps not deadlocked, but equally divided in opinion. Most manufacturers of electrical equipment favor the two-wire system. On the other hand, makers of cars seem to prefer the single-wire. I tried very hard to adopt a neutral attitude and that was one reason we did not come to any conclusion at the above-mentioned meeting of the Electrical Equipment Division.

At the second meeting there were more present—probably eight or ten members of the Division. We discussed the matter three hours steadily, I think, and the discussion brought out this: that however much some of us seemed to prefer the two-wire system the tendency was very clear; it was evident that the single-wire appeared to be coming. As the Society endeavors to lead or to keep abreast of the very

Digitized by Google

best practice in the industry, it seemed wise to us to make some progress by submitting this report. Mr. Bijur, in presenting it, was very modest. He personally favored the two-wire system, but did not let that color his views in presenting the matter to you. I think he believes in looking beyond the present season, beyond his present preferences or wishes in the matter. We are trying to see ahead to the best practice of the coming seasons. If we were to recommend *two* wire and certain conditions in the industry seem to call for single wire to an increasing extent every season, the committee would be lagging behind the industry rather than keeping abreast of it and would not be living up to its true functions.

CHAIRMAN SOUTHER:—I judge, Mr. Conant, that nothing fundamentally wrong developed about the single-wire system?

W. H. CONANT:—We discussed that, Mr. Chairman, from more points of view than I can possibly take time to describe or report. There are distinct electrical advantages in favor of the two-wire system, but we must put them secondary to the automobile as a whole. There are distinct manufacturing advantages so far as the cars are concerned in the single-wire system and it is very hard to oppose those manufacturing advantages. If the electrical manufacturers followed entirely their own inclination, I am inclined to think that a good many two-wire systems would be in use, but electrical manufacturers are in business to supply what motor car manufacturers demand or prefer.

Perhaps I have omitted the most important point. The one feature more than any other that has swung some of us around to the single-wire system is the matter of lamps and receptacles or sockets. With the single-wire system we can obtain better lamps, better contacts and better receptacles. Mechanically one wire is much better. That is the point. Electrically it is not as good, but the mechanical part is so much better taken care of within the space allotted, within the permissible diameters, that we have rather worked back from the lamps to the wiring system.

In the matter of fuses we are all agreed that in the single-wire system they are essential. Mr. Kebler thinks we should not have fuses with the two-wire system, but I think the committee rather overruled him in that matter.

HOWARD E. COFFIN:—I think the tendency is towards the single-wire system. I have discussed this with our people two or three times. It rather always gets back to the question that there are a good many manufacturing advantages in favor of the single-wire system. We all lose sight, perhaps, of some of the electrical advantages in looking at the manufacturing end of it. Further than that, I think either the single-wire or double-wire system may be made a success or a failure by the manner in which the installation is made. Either must be installed properly to get good results.

W. H. PALMER, JR.:—I was impressed by this: the action of the committee was taken from a more or less practical point of view. They felt it was necessary to do something that would guide development,

Digitized by Google

particularly the design of fittings and attachments. We had the two systems, the single-wire and double-wire, using entirely different lamp sockets, and things of that kind, at least suggesting the use of entirely different ones, and the result seemed to be that the manufacturers of such parts were more or less marking time and waiting to see what was going to happen. They did not want to switch over from one to the other exclusively unless they knew that was the thing that was going to be asked for.

What seemed to be necessary was good, consistent work in the perfection of details in the lamp sockets and systems of wiring generally. The committee seems to have taken a very careful unbiased view of the situation and convinced themselves beyond any question that the tendency is towards the single wire. I think it is a fact that the largest manufacturers of electric lighting systems, those who are equipping the largest numbers of cars today, have declared in favor of the single-wire system after having gone into the matter very carefully. The Dayton Electrical Laboratories Company, for example, after equipping to date over 125,000 cars, have recently gone over to the single-wire system as a standard. I believe the Gray & Davis Company, another very large manufacturer of equipment, having equipped in the neighborhood of 75,000 cars to date, are also in favor of the single-wire system. In addition we have automobile manufacturers like Mr. Riker, for example, chairman of our Division, who is not only an electrical engineer in training but has been an automobile manufacturer for many years, who has tried both systems, has looked into the matter from every angle, and is very much in favor of the single-wire system.

It is not that the double-wire system is not all right and cannot be made to work, but it is a feeling that we have with respect to all matters that the Standards Committee handles and in connection with which it gives something for recommended practice, that it is better to concentrate efforts on some one line and get somewhere, than it is to carry along a number of things, all of which may be equally good. You can make more progress by recommending practice along one single line, and getting everybody to work on that, than you can by dividing your efforts. On the other hand, as Mr. Souther says, there is nothing in the recommendation that need prevent anyone from using any other construction if he thinks it is better. This matter has been discussed in the committee meetings for two years. We were going around and around a circle, and every time we discussed it we seemed to get nearer to that focal point, and finally we decided it was time for us to stop talking and try to do something; and a motion to recommend the single wire was passed at the last committee meeting without a dissenting vote.

E. E. Sweet:—We favor the single-wire system.

David Fergusson:—We have been using the single-wire system for two years and are very much in favor of it.

A. D. Libby:—It is immaterial to me personally whether it is a single-wire system or a two-wire system, so long as the *best* results are obtained,

Digitized by Google

results which are lasting and permanent and will give the best and most lasting satisfaction to the public.

If it is in order, I will mention here an illustration which I have referred to in my paper in which a high-priced car came within the merest chance of getting burned up on account of the one-wire system, because the wire running up to the dash became grounded on the conduit, and there being no protection whatever in that lead the conduit was melted and ran down like lead. It was only by the quickest energetic action of the men who happened to be there at the time that the car was saved from being burned up. Now that is only one of a number of instances which I have knowledge of.

I think there is not a question of doubt in the minds of any of us that the two-wire system will do the work perfectly satisfactorily. In addition, it gives the car owner twice as many chances against trouble. In other words, with the one-wire system, wherein the practice has been in the past and is today, to have no protection whatever in the battery lead running to the starting switch and on to the starting motor, a ground at the motor brush, which I have seen occur, will start some trouble. Either the wire is going to burn off at some one of the joints or it is going to injure the battery or start a fire in some place.

With a two-wire system a ground can come on one of the leads and not give any trouble, and a man will not have any trouble unless he should happen to get a ground on the other side. In view of the added protection it gives the car owner, it seems to me that the two-wire system is the right system to be put on a car. If I were buying a car today and it had a one-wire system, I would change it immediately. I absolutely would not drive a car with a one-wire system. I do not care how well it be put in, how much precaution be taken in installing that one lead, even with fuses on, I would change the wiring over to the two-wire metallic system merely for my own protection. It seems to me that a car owner, who has to pay for a license on his car, taxes, and numerous other items, should have his car constructed so as to give him a minimum insurance rate. So far as I can see, the only reason the one-wire system is used is because it saves a few cents to the car builder, and this is a big item to those who are constructing and putting out a large number of cars. But the public has to pay ultimately, and for that reason I am heartily in favor of the two-wire system. I am not interested in the manufacture of apparatus which involves either one or two wires, such as lamp bulbs and lamps. Our lighting system will work on a car wired for a one-wire system or a two-wire system, I am merely stating my viewpoint as an individual.

INSULATION TEST

I would like to ask a question in regard to the report of the committee on the matter of insulation test. The report recommended a temperature of 300 degrees to be maintained for thirty minutes. I am interested to know what part of the insulation in and around

Digitized by Google

an automobile is included in that specification, and would also like to have some inkling of the reasoning by which this temperature was arrived at; what particular insulation the committee had in mind when they were making the report.

JOSEPH BIJUR:—The report does not refer to the insulating covering of the wires, but to the insulation which is commonly called molded insulation, which is used in sockets, receptacles and other parts where the insulation is supposed to be solid, not yielding. The rise of temperature with time was selected so as to prepare a desirable specification which would prevent the use of compounds which are liable to acquire a distorted shape by reason of an accidental rise of temperature that could occur on a car either from receiving heat from adjacent parts or from being heated by a large electric current resulting from a short-circuit. It was determined that this temperature would serve as a criterion and distinguish between those compounds which are not liable to flow from those compounds which are. Such compounds as Bakelite, Condensite and Bakelite Fibre and perhaps other compounds still to be heard from, resist that temperature perfectly. There is no hardship and it is not expensive to get those compounds on account of this specification; whereas it completely ignores compounds that are made of shellac and rubber and various materials which appear to have good insulating qualities but upon actual use distort to such an extent as to endanger the safety of the fitting.

A. D. LIBBY:—May I ask if it was intended to include any or all parts around the magneto?

JOSEPH BIJUR:—It was intended that it should include ultimately all parts around the magneto. It is recognized that at present magneto parts are made of rubber of a high quality and that they do not distort as they become heated.

A. D. LIBBY:—Under 300 degrees of heat?

JOSEPH BIJUR:—No, I say they do not distort under the heat of practice, and it is doubtful whether they will come under this specification, but it was desired to recommend that all parts of the magneto should be made of equally heat-resisting insulation eventually.

A. D. LIBBY:—There are certain things about a magneto that I believe must be made of hard rubber. I have not seen any hard rubber that will withstand 300 degrees continuously without distorting. While so far as building magnetos is concerned, we aim all the time to get the best insulating compounds that it is practical to obtain and fulfill all the conditions, I object to having stipulated in that report any compound that would be impracticable to put into the machine to make it an operative affair.

CHAIRMAN SOUTHER:—The paragraph in question reads, "All insulating material used in connection with plugs, sockets and similar devices of electrical apparatus for use on gasoline automobiles." Now, should that be further limited or more definitely limited?

Digitized by Google

W. H. CONANT:—Just for the moment, Mr. Chairman, we may have overlooked the impelling cause of this recommendation. We are trying to forestall more drastic action on the part of the Board of Fire Underwriters. We want to lay down a trend of practice for these electric circuits such that the Board of Fire Underwriters will not later compel us to follow much more strict regulations that may seem unnecessarily harsh to us in the industry. In doing this work we have been in consultation with representatives of that board and are trying to have our recommendations accepted.

A. D. LIBBY:—Hard rubber will withstand about 220 degrees, which is much hotter than any magneto gets, unless it is put absolutely in contact with the exhaust pipe. In cases where it has to be in close proximity to the exhaust pipe a baffle plate is used to protect it. There are certain places in the design of a magneto or its substitute where such compounds as mentioned, Bakelite and Condensite, are absolutely not satisfactory, on account of the high-tension arc.

W. H. PALMER, JR.:—Mr. Chairman, I think we might rest on the wording of this report. For example, in the storage battery rubber is used in the jars. I think there is no idea that the storage battery manufacturer must use some other material. I think the report means just what it says: "Plugs, sockets and similar devices." Mr. Libby and the storage battery manufacturers are a good deal in the same boat; their apparatus is not referred to.

CHAIRMAN SOUTHER:—If the words "magnetos and storage batteries excluded" were put in parenthesis, would the trouble be over?

W. H. PALMER, JR.:—That seems to me unnecessary.

JOSEPH BIJUR:—It seems to me unnecessary. From the wording, "in connection with plugs, sockets and similar devices," that similarity must cease somewhere and if the interior parts of the magneto could not be made of the material in question, I think there is nothing in the report which calls for their being made of it. The same applies to the storage battery. I think the wording of the report should stand just as it is.

C. W. MCKINLEY:—In this connection I might state that several weeks ago I had an inquiry from the Underwriters' Laboratory as to the maximum temperatures that occur under the hood of a motor car.

WIRING SYSTEMS ARGUMENTS

JOSEPH BIJUR:—It may interest the members in this connection to know one or two of the reasons pro and con in regard to the single-wire system. I do not know whether it is generally known that with duplex magnetos it is impossible to use the single-wire system. The members should know that before they fit in one way or the other. That is, using the duplex magneto, as distinguished from the dual, it is impossible to ground one side of the system without using the battery side of the duplex magneto.

There is another point about the single-wire system. It conflicts to a certain extent with the use of the dash-lamp and the tail-lamp in series, which was very popular during the past year. That is to say, when the

Digitized by Google

dash-lamp is wired in series with the tail-lamp it of course serves as an indicator when the tail-lamp goes out or that the owner failed to have the tail-lamp lighted. With the use of the single-wire system it is quite difficult to make this combination, for the reason that the single-wire system requires certain very special fittings, or it requires that two wires should lead from one of these lamps to the other, and that prevents socket uniformity, which is an objection to the single-wire system as a standard.

There is one other point: in connection with the single-wire system it is often desirable to have one common plug to go into each head lamp in which there are two bulbs, the main head lamp bulb and a smaller "marker" bulb. The plug is now a two-wire fitting in the sense that it receives one wire with the lead and one with the return, uses two wires, one of which goes to one bulb and one to the other. So that the use of two conductors embraced in a single socket would not be avoided. It is intended to retain that, or permit it.

We should all know that the single-wire system has very distinct advantages and very distinct disadvantages. Possibly the chief advantage in the single-wire system is the splendid shape of the fitting. There is a serious disadvantage with the single-wire system; every place where exposed metal occurs, any contact between that metal and adjacent metal on the car produces a short-circuit, any part whatever. That is quite contrary to the case with the two-wire system, which is like an island in the sea. It stands up surrounded by danger signs, and in fact not till it touches produces a short-circuit.

It is not just a question of doing the work carefully, it is a question of paying great attention to the detail of the design. In that connection a committee has been appointed to confer on a fitting specificaion by which single-wire systems will be made as safe and reliable as possible. The single-wire system must be put in with care. The committee hopes to specify a manner in which the single-wire system can be carried out to the best advantage.

A. L. McMurtry:—I think this discussion is rather long drawn out. It is my opinion that the question will be settled by the automobile manufacturers themselves. As time goes on more manufacturers are adopting the single wire, so that if this discussion is carried on much longer, the question will be settled by the manufacturers.

The fittings and receptacles for the single-wire system are the only things that have delayed the adoption so far, and now that they are on the market, I feel that about seventy per cent. of the cars built in 1915 will be fitted with the single-wire system.

C. W. McKinley:—Mr. Bijur remarked that in using the tail-lamp and dash-lamp in series, in the single-wire system it is necessary to use a double-contact bulb in the dash-lamp and a single-contact bulb in the tail-lamp. We are using the tail-lamp and dash-lamp in series and both have single-contact bulbs. Several firms furnish the dash-lamp fixture arranged for single-contact bulbs and for series wiring with the tail-lamp.

Digitized by Google

CHAIRMAN SOUTHER:—Shall this report be submitted to the Council and thence to the Society for discussion and adoption? Are you ready for the question? Those in favor signify by saying "aye"; opposed "no." It is a vote.

SECOND REPORT OF THE PLEASURE CAR WHEELS DIVISION

(As Accepted)

ROUTINE TEST OF RIMS

It is the opinion of the Pleasure Car Wheels Division that the test of bursting strength or to destruction is not the best routine test to be used in connection with the inspection of rims for pneumatic tires. It is the opinion of the Division that a pressure test with predetermined deflection under predetermined pressure is a good routine test; the test to be made with water pressure.

The measurement of deflection of a Clincher rim should be made across the outside of the clinches (dimension H in the drawing).

The deflection of a Straight-side rim should be measured across the edges of the straight sides (dimension H in the drawing).

A = maximum inside distance between tips of tire-retaining flanges.

H = maximum outside distance between tire-retaining flanges.

Deflection should be measured from a fixed initial load of twenty-five pounds per square inch up to a predetermined maximum, the figures suggested for which are as follows:

Section	Rim Size	Pressure. Pounds	Maximum Allowable Deflection	Total Permanent set after test. 25 pounds pressure
D	3½	140	.06″	.02″
E	4	160	.07″	.03″
F	4½	180	.10″	.06″

In conducting tests the measurement of deflection should be made after added increments of load of 20 to 25 pounds; and of the corresponding set with the load released to the initial pressure of 25 pounds per square inch.

These figures of maximum allowable deflection and total permanent set, are the same as those contained in our report submitted to the Standards Committee last January. That report was referred back to

Digitized by Google

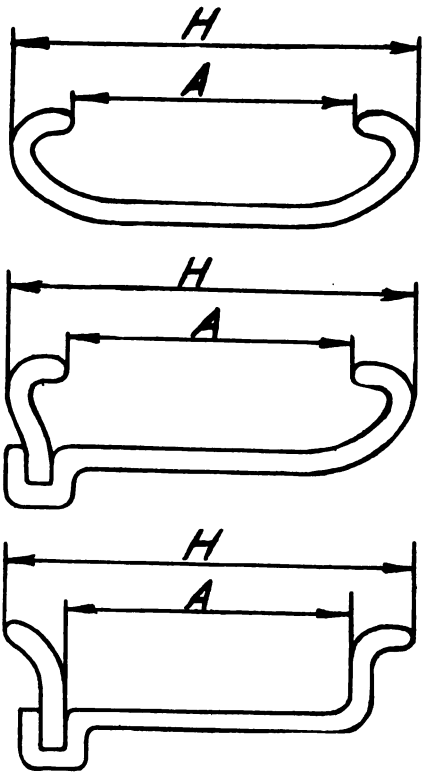

the Pleasure Car Wheels Division at its own request as the Division wanted to reconsider and be sure of some of the points involved in the report.

During the year the Division has continued its tests on rims. There are given below curves plotted from the results of tests on some twenty-seven different rims which are specified by letters, the makers' names being omitted. The lines shown by the cross-marks indicate the danger points deduced from our above given recommendation for allowable deflection and permanent set. The lettered curves indicate the deflection and permanent set of the rims tested. The hydraulic method of testing was used. Regular size soft-bead clincher tires were used for clincher type rims, and inextensible, shaped-bead, straight-side tires were used for the straight-side type rims. Although the majority of tires used on clincher-type

Digitized by Google

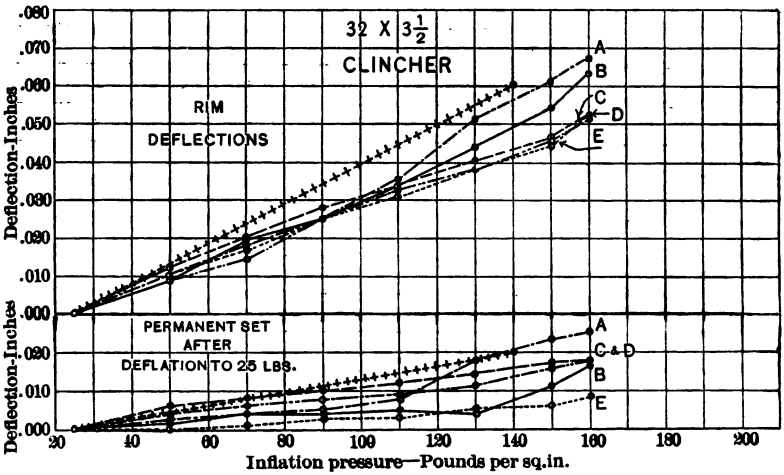

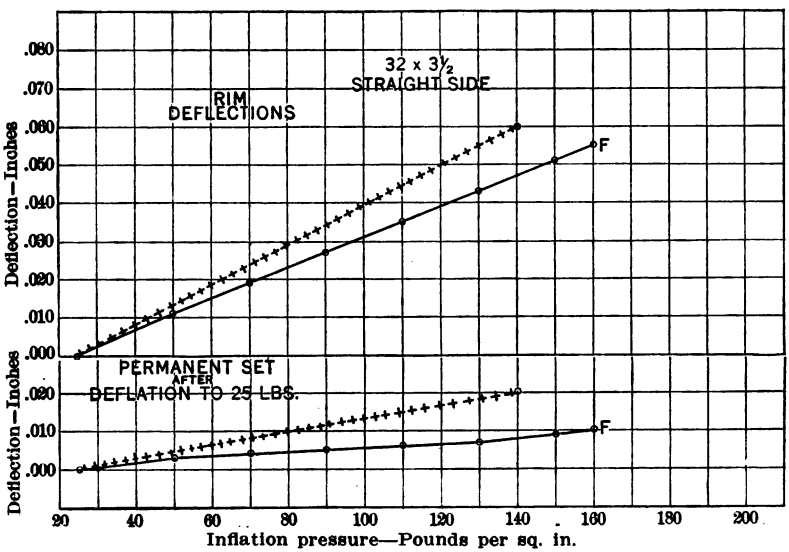

rims over 30 x 3½" size are so-called quick detachable clincher tires with partially or wholly inextensible beads, it was thought best to make the tests with soft-bead clincher tires in order to subject the rims to the hardest possible conditions that would ever be imposed in actual service. When Q. D. clincher tires are used the effect is less severe on the rim. The allowable deflection and permanent set were so chosen that a fair factor of safety was provided for the rims when oversize

Digitized by Google

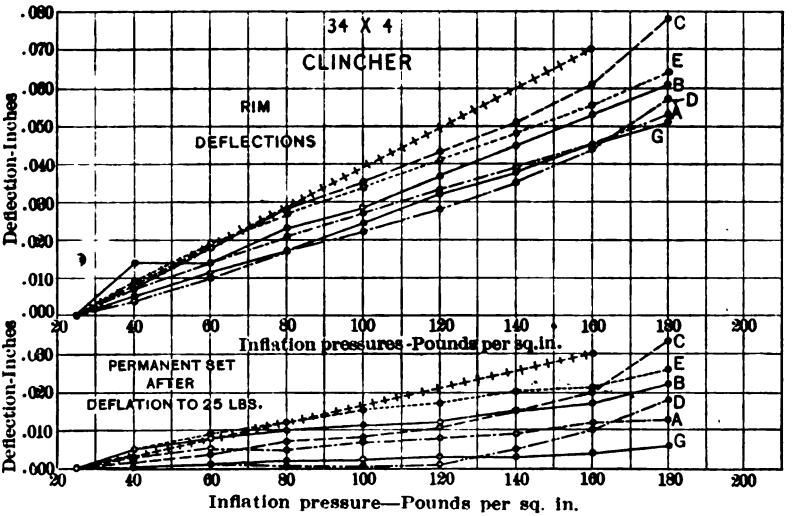

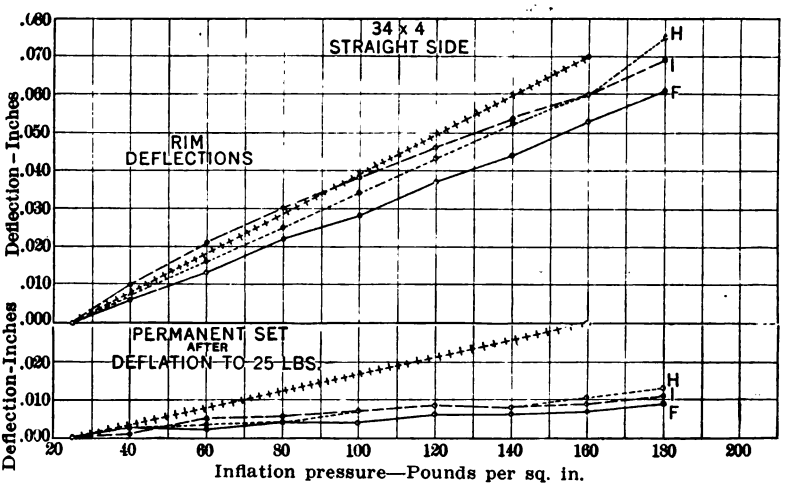

tires were used on them. The rims were not tested to the bursting strength, but simply to predetermined pressure.

The tests indicate that some of the 4½-inch rims needed strengthening. It is the view of the Division, however, after considering the above mentioned tests, that the figures recommended by it originally and as given above are justifiable.

Digitized by Google

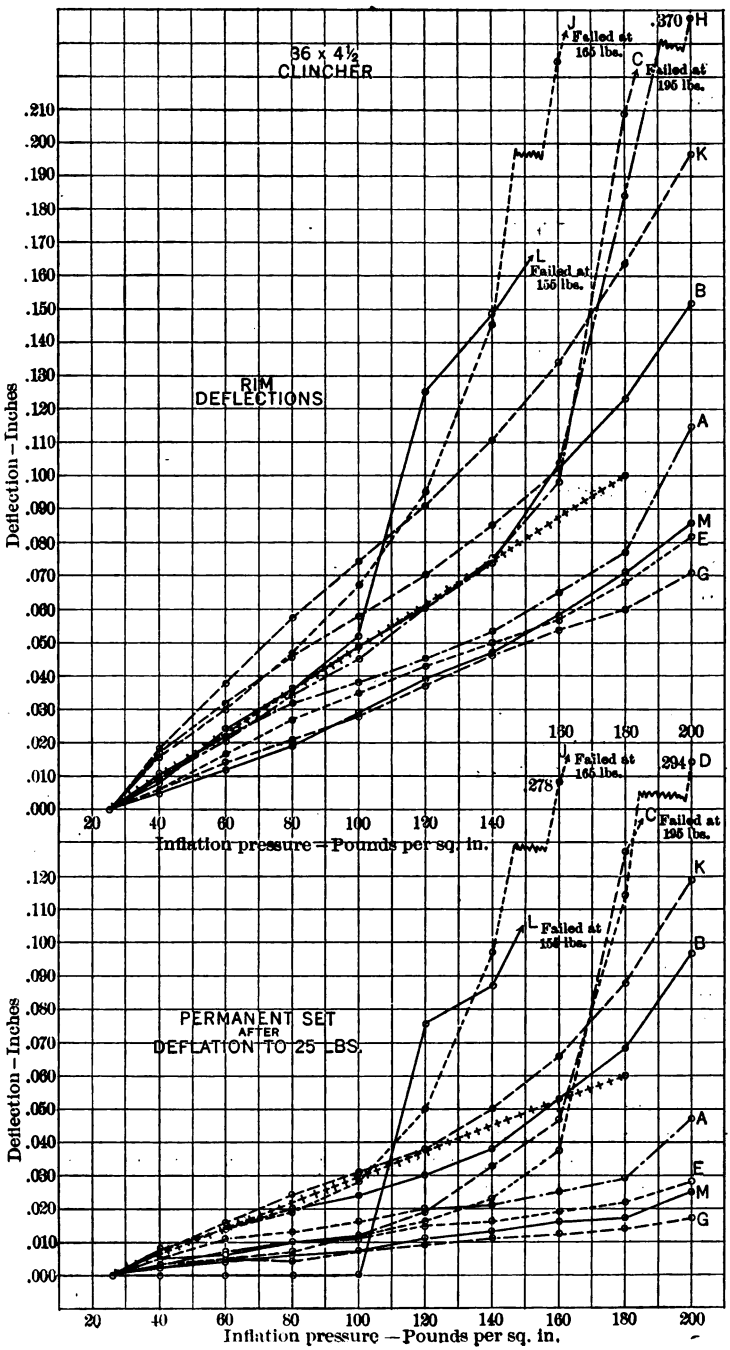

Digitized by Google

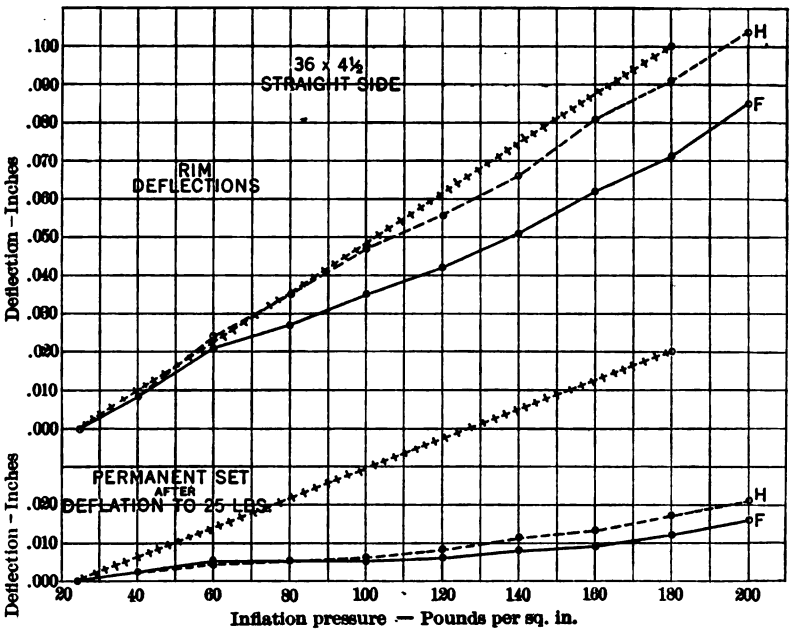

TIRE SIZES

Eight tire sizes which the Division has had in mind recommending, but as to which no specific recommendation is made at this time, are shown in the following table:

Rim Sizes	*Tire Sizes*				*Tire Seat Diameter*
30 x 3	30 x 3				24"
30 x 3½		30 x 3½			23"
32 x 3½		32 x 3½			25"
32 x 4			32 x 4		24"
34 x 4			34 x 4		26"
34 x 4½				34 x 4½	25"
36 x 4½				36 x 4½	27"
38 x 5½				38 x 5½	27"

This table, it will be noted, involves only eight rim sizes, and five tire seat diameters. One or two other regular tire sizes are under consideration by the Division.

It was thought by the Division that tire oversizes should not be recommended for regular equipment.

Respectfully submitted.
PLEASURE CAR WHEELS DIVISION,
Henry Souther,
Chairman.

Digitized by Google

DISCUSSION

E. R. HALL:—In considering the standardization of wheels for pleasure vehicles, our attention was immediately directed to the large number of rims in use and we thought the best thing to do at first was to evolve certain specifications to cover the testing of these rims, to determine how safe they are to use, and then possibly work on limiting of the number of sizes, the standardization of types, and from that work into the wheel itself.

RIM TEST SPECIFICATIONS

We have prepared a set of test specifications, and after testing a large number of rims now in use, feel sure that rims which meet our requirements in this respect are properly strong for practice. You will note in the report a table showing these specifications for D, E and F section automobile rims. The maximum pressure to which we test these rims in our recommended specifications for testing is approximately twice the pressure prescribed by the tire manufacturers for the tires. We specify a maximum allowable deflection after testing to this pressure returning to a basis of 25 pounds pressure, and also specify a maximum allowable permanent set at 25 pounds pressure after completion of the test; these measurements being taken at H in the drawing shown in the report.

The procedure of the test which we recommend is to start at 25 pounds and take initial reading at H, then increase the pressure by increments of from 20 to 25 pounds, returning each time to 25 pounds inflation and measuring each time the deflection and set. The safest and most correct way to make these tests we find is by water pressure.

The committee has worked up a series of curves showing results of tests on the various sizes and types of rims tested. The curves made up of crosses correspond to our specifications for the tests, showing the maximum allowable deflection and set. The other curves shown represent the results obtained from the various rims tested. As will be noted, the rim test curves which lie in the area below the cross line represent rims which are safe according to our specifications, while the curves lying above the cross line represent rims which we would consider have not sufficient safety factor. Our tests have been made on the most common sizes of rims.

You will note on the 4½" plots that the curves representing a number of rims lie in the danger zone above the cross line, while there are a large number which lie in the safety zone. In practice we have located no objection to the strength of the 3½" and 4" rims, but we do learn of trouble being experienced with some types of 4½" rims. Thus practice would seem to bear out the correctness of our specification. The question has been raised whether our 4½" specifications were a little too severe, but judging from this trouble which has been experienced in practice, and also from the fact that the majority of rims with which no trouble has been experienced lie in the safety zone, the committee believes that the specifications are not too severe. In this connection we must also remember that oversized tires are frequently used on these rims.

Digitized by Google

TIRE SIZES

The Division has suggested a very much reduced list of tire sizes as standard for automobile manufacturers, as there are a very large number of different sized tires manufactured to-day; the same is true of rims, and the committee has endeavored to eliminate a large number of these sizes and to standardize a few which will meet the requirements of the trade. This list is shown in the report and is still under advisement, as we have in mind the possibility of adding another size or two, particularly of 5″ size.

CHAIRMAN SOUTHER:—Do you carry in mind the number of tire sizes commonly used now and what percentage of the number of sizes used is covered by this table, roughly speaking?

C. C. CARLTON:—There are 46 to 51 or 52 different sizes.

E. R. HALL:—Somewhere around 50, and here we now list 8 sizes.

CHAIRMAN SOUTHER:—Is it not true that 85 per cent. of the consumption is within those?

E. R. HALL:—Fully 85 per cent. of the automobile tires manufactured and used to-day are of the sizes listed in our recommended standard.

CHAIRMAN SOUTHER:—Mr. Fergusson, you were the cause of a great deal of good work that has been done by this committee. I am sure the members present would be very glad to hear of your experience with the large-sized rims, those of 36 by 4½, or the F section, as it is called. showing that some work of this kind is necessary. I think it is not too well known in the industry as a whole that there was any size or character of rim that was in particular jeopardy. It seems to be a fact, and I think what Mr. Fergusson may say will indicate a starting point in this investigation.

DAVID FERGUSSON:—Our company had a great deal of trouble with demountable rims when they first came into vogue about three or four years ago. Every Tom, Dick and Harry was making one, and there was no satisfaction in putting them on a car. Our customers would specify a certain make of demountable rim and we had as a rule to put it on. We hated to do it in many cases and advised against it, but in many cases the customer insisted in putting on that rim, and in some cases accidents happened. That gradually brought up the fact that there was no rule at all to make those rims by; anybody made a new rim in any way that he saw fit; there was no standard pressure recognized that these should withstand, with the result that we held back for a whole year from putting on demountable rims after everybody else adopted them, because we could not really find anything that met our idea of what a rim should be. We even had trouble with several quick detachable rims of recognized standard makes, especially in the case of the 36″ by 4½″, using a 37″ by 5″ tire, and what was most surprising was that the rim makers could not tell what pressure they would bear. We made experiments ourselves and found that many quick detachable rings would blow off at very little more pressure than the pressure that the tire makers recommended for tire inflation. I think that was what brought

Digitized by Google

this matter before the Society. I think that even now the 37" by 5" tire on the 36" by 4½" rim is not quite safe. We certainly ought to specify a pretty high test pressure for tires on standard rims. They have a lower factor of safety than any other part of the car.

CHAIRMAN SOUTHER:—It is a fact, it is not, Mr. Ferguson, that you have finally obtained a special material and special treatment of it that give you a strong Q. D. rim?

DAVID FERGUSSON:—We have specified a high carbon steel specially heat treated rim in order to make it stand up. But I think that even now it is the weakest part of the car.

CHAIRMAN SOUTHER:—The committee tested one of the rims that Mr. Fergusson complained of as being weak, and also one that he recommended as being strong enough, but not too strong. The tests made confirm his practical experience. And the safety limits for deflection and set suggested by the committee conform to those figures very largely.

E. R. HALL:—In touching on what the Division has done I failed to bring out the fact that the rims were tested under the worst possible conditions that could be applied in practice. For instance, all clincher-type rims were tested using soft extensible bead clincher tires, whereas in practice the majority of tires used on these rims are of the Q. D. clincher type, having partially or wholly inextensible beads, which are much less severe on the rim. Our specifications we feel are sufficiently stiff to provide ample safety when oversized tires are used, such as a 37. by 5 tire on a 36 by 4½ rim.

CHAIRMAN SOUTHER:—Would you mind stating why the soft extensible bead tire is worse on the rim than the more or less inextensible bead or stiff bead? In other words, how does the rim fail? That is what it goes back to.

E. R. HALL:—The rim generally fails on the side. If the rim has a side ring it is either lifted out of its gutter or rolled so that it snaps off. When a clincher tire is used the side flange of the rim has to take care of both horizontal and vertical components of tension brought to bear on it by the tire wall. The combination of this vertical or upward pressure with the horizontal is very severe on the rim, the tendency being to lift or roll the ring or side flange. When Q. D. clincher tires are used the upward or vertical component is either very largely or wholly taken care of by the fact that the circumference of the tire bead itself cannot be increased, so that the rim has only to take care of the horizontal component, the effect of which is very much less severe than the effect of vertical and horizontal components combined.

CHAIRMAN SOUTHER:—A further branch of the work of the committee is the attempt to bring together the various demountables, so that there will be a standard wood felloe diameter and width. It may be that we will not succeed, but with the idea of bringing out all the points that the committee faces in its work, one or two papers will be presented before the Society on this subject. The papers will be of an educational type. We will all have a chance to hear them and read them and per-

Digitized by Google

haps come forward with suggestions; but the committee itself is stalled for the time being on that subject. It must be threshed out. There is a difference of opinion, perfectly justified, an amicable difference, and we want light on the subject. That light will be given by these papers which will be read this week.

Are there any further remarks on the work of this committee?

C. W. McKinley:—Mr. Chairman, I would like to ask whether those tests were made with the later type of demountable rim, with what are called the wide section rims for straight-side tires, under road conditions, with the tire partially inflated, which is apt to be the general rule.

E. R. Hall:—The Division made no attempt to test these rims except by what we call "dead test," to determine the effect on the rim of the various inflation pressures of the tire. We did not attempt to approximate road conditions.

C. W. McKinley:—We tested out a number of different makes of this type of rim; straight-side, 34 by 4, run at approximately 45 pounds pressure. We drove 35 or 40 miles over an ordinary country stone road, and the rims were flattened down as much as ⅜ of an inch from actual true diameter, which appeared to be very bad. If that should continue, the rims would become useless in a very short time.

Chairman Souther:—It was the battering effect of the car pounding on the road, because there was too little air?

C. W. McKinley:—Yes. We found the same condition with the full inflation driving over ordinary roads. You often hit a stone or a railroad track. Driving in a street car track deflects the edge from true measurement an appreciable amount, and the rims would be badly damaged probably after 3,000 or 4,000 miles' use.

E. R. Hall:—The point Mr. McKinley brings up is one of rim design, with which the Division has not dealt. This matter may come up later on. It is true that some straight-side rims can have their flanges battered more readily than the corresponding size in clincher type, the latter being reinforced by its hook. Straight-side rims can be made with the edges of the flange turned under, resulting in very much increased strength.

C. W. McKinley:—This showed up more in the demountable type than it did in the old quick detachable, because the detachable ring of this old type rim, being of heavy section, stood up well under pounding on the road. All the pounding seemed to be on the outer portion of the rim. The inside portion seemed to be in good shape.

R. S. Bryant:—The effect Mr. McKinley speaks of is simply due to the concussion of hitting the side of the rim on the car tracks and cannot be avoided very well unless you have a great deal heavier rim.

Chairman Souther:—Mr. Sweet, have you come across anything of this character with the straight-side tire?

E. E. Sweet:—No, sir.

E. R. Hall:—It is probable that the Division specifications for rim strength will eliminate the rims which give the defects of which Mr.

Digitized by Google

McKinley speaks, as you must have strength there in order to stand our test.

CHAIRMAN SOUTHER:—The thought of the committee is that in the absence of this knowledge that there was any real weakness in rims, the makers paid very little attention to the strength and materials used, because it did not seem to be necessary, but now that attention has been brought to it there will be a selection of material that will be much more suitable for the work to be done.

You will notice that we have not given any names here at all. The names of these various rims are absolutely in the hands of the committee and will remain so. A certain length of time which we agreed upon, say six months or a year, has been given to bring about the improvement of material that seems very desirable.

OVERSIZE TIRES

C. C. CARLTON:—Mr. Chairman, I would not like to see the report of the committee passed over without a little further attention being given to the list of tire sizes. I wonder if there is any objection to this list of tire sizes. It is a very radical suggestion, when you stop to think of it, reducing the recommended number of tire sizes from some 50 down to 8. It was the opinion of the committee that only *standard* sizes should be here listed and that the oversizes should be at the consumer's option. For instance, when you say 32 by 3½, it is not the desire of the committee, as I understand it, to eliminate the 33 by 4 oversize, and in the 36 by 4½ to eliminate the 37 by 5 oversize tire, but merely to recommend the regular sizes as the standard sizes to be recommended to the car manufacturer, leaving the oversize tires to the option of the car owner. In addition, the committee will note the elimination of the 36 by 5 size entirely, which has been a very popular size and is still in some use by car manufacturers. I would like to add just a word on the 36″ by 5″ size. A part of the committee was very much in favor of the addition of the 36″ by 5″ tire to this list, with the added suggestion that a corresponding 5″ rim section be adopted for use in connection with it. There are a great many cars, especially seven-passenger, carrying 36″ by 4½″ tire equipment which are really overloaded. If the customer uses 37″ by 5″ oversize tires they must be purchased as additional equipment. Some seven-passenger cars have 34″ by 4½″ tires and some 35″ by 5″. These sizes are preferred because of the smaller wheel diameter. Many manufacturers prefer a 26″ wheel diameter to a 27″ and at the same time need a 5″ tire rather than a 4½″. This can only be secured by the 37″ by 5″ tire which needs a special 5″ rim in order that it may give the best service, instead of being squeezed into the 4½″ section to which it has always been applied.

CHAIRMAN SOUTHER:—Does not that new rim have to go back to the Clincher Tire Association?

C. C. CARLTON:—Yes.

CHAIRMAN SOUTHER:—Then that is probably not within the province of

Digitized by Google

this committee. The Clincher Rim Association already have that up for consideration at the present time.

Mr. Carlton, you spoke of oversize tires. How many would be added to this list if they were all printed?

C. C. CARLTON:—31 by 4 for the 30 by 3½; 33 by 4 for the 32 by 3½; 35 by 4½ for the 34 by 4; 35 by 5 for the 34 by 4½; 37 by 5 for the 36 by 4½, and 39 by 6 for the 38 by 5½.

CHAIRMAN SOUTHER:—That is six additions, or possibly seven, with the 36 by 5, on top of this list of 8, indicating the extreme upper limit. That is not a very serious thing in place of 50 sizes now existing.

C. C. CARLTON:—There seems to be no dissension among the tire companies as to these sizes.

CHAIRMAN SOUTHER:—Where will the opposition come from?

C. C. CARLTON:—I cannot see that there will be any opposition.

CHAIRMAN SOUTHER:—Then why are there 50 sizes?

C. C. CARLTON:—Because the Society of Automobile Engineers has not taken hold of the matter before. Even now new cars being manufactured take some new tire sizes that have never been used before.

CHAIRMAN SOUTHER:—What is the idea?

C. C. CARLTON:—The tire companies do not welcome it, surely. It seems to be an idea on the part of the engineer to get tire sizes that nobody else has ever used before. That is the only reason I can see.

CHAIRMAN SOUTHER:—Shall this report be submitted to the Council and to the Society as a whole? Are there any remarks? Those in favor signify by saying "aye"; opposed, "no." It is a vote.

SECOND REPORT OF THE MOTOR TESTING DIVISION.

(As Accepted)

Motor Testing Forms Nos. 1, 2 and 3 are intended to provide a means of recording in a systematic manner important data that should be noted in making *commercial* tests of motors.

RULES AND PRECAUTIONS TO BE OBSERVED IN FILLING OUT DATA SHEETS

(*Numbers Refer to Lines on Data Sheets*)

FORM NO. 1

(2) Piston displacement per cylinder—cubic inches $= \frac{\pi d^2 l}{4}$

Digitized by Google

GASOLINE MOTOR TESTING FORM No. 1

Test No. _____ Page _____
Date _____

Name of Motor _____

Test made in _____ Laboratory. By _____

MOTOR

*(1) No. of Cyl. _____ Bore, In. _____ Stroke, In. _____ Cycle _____

(2) Piston Displ. per Cyl., Cu. In. _____ Total per Motor, Cu. In. _____

(3) Clear'ce (V_c) Cu. In. _____ Total Cyl. Vol. (V) Cu. In. _____ Ratio $= \frac{\text{CLEAR'CE VOL.}}{\text{TOTAL VOL.}} = \left(\frac{V_c}{V}\right) =$ _____

(4) Type of Cylinder Casting (Single, Pairs, Threes, Block) _____

(5) Type of Valves and Location _____

(6) Kind of Mat'l in Cyl's _____ How Cooled _____ Pump or Thermosyphon _____

(7) Piston, Weight with Rings and Pin, Lb. _____ Length, In. _____

(8) Rings, No. _____ Type _____ Width, In. _____

(9) Connecting-Rod, Weight, Lb. _____ Length C. to C., In. _____

(10) Piston-Pin Bearings, Mat'l _____ Dia. In. _____ Length, In. _____

(11) Crank Bearings Mat'l _____ Dia. In. _____ Length, In. _____

(12) Main Bearings, No. _____ Mat'l _____ Dia. In. _____ Length, In. _____

(13) Inlet Valve, O. D., In. _____ I. D. of Seat, In. _____ Lift, In. _____

(14) Exhaust Valve, O. D., In. _____ I. D. of Seat, In. _____ Lift, In. _____
(In case of Non-Poppet Valve give dimensional sketch of port opening.)

(15) Flywheel, O. D., In. — _____ Wt., Lb. _____

(16) Valve-Timing in inches measured on circumference of flywheel.

INLET	EXHAUST
OPENS BEFORE / AFTER TOP CENTER, IN. _____ DEG. _____	OPENS BEFORE LOWER CENTER, IN. _____ DEG. _____
CLOSES AFTER LOWER CENTER, IN. _____ DEG. _____	CLOSES BEFORE / AFTER TOP CENTER, IN. _____ DEG. _____

(17) Weight of Motor, Lb. _____
Indicate what accessories and how many pounds of water and oil are included in weight given

CARBURETION

(18) Carburetor, Trade Name _____ Model _____

(19) Nom. Size, In. _____ Wt., Lb. _____ How Heated _____

(20) General Principles of Operation _____

(21) General Description of Intake-Pipe _____

IGNITION

(22) Name and Type of System _____ Wt., Lb. _____

(23) Name and Type of Distributor _____

(24) Max. Deg. Spark Adv. _____ Deg. Ret'd _____ Firing Order _____

(25) Name and Type of Spark Plugs _____

(26) Location _____

LUBRICATING SYSTEM

(27) Describe _____

where $d =$ bore in inches.

$l =$ stroke in inches.

$\pi = 3.1416$.

To obtain total piston displacement of motor, multiply piston displacement per cylinder by number of cylinders.

(3) Clearance space: By clearance space is meant the volume occupied

Digitized by Google

by the charge when the piston is at the top of the compression stroke. To measure this volume, place the piston on top center of compression stroke (*i.e.* with both valves closed), and fill the compression space from a graduate containing a known volume of light oil or kerosene. The filling should be done through a hole as near the top of the clearance space as possible, and care should be taken to prevent leakage. A chemist's graduate should be used for measuring the volume of oil used. This volume should be reduced to cubic inches.

The total cylinder volume = Clearance space + piston displacement (one cylinder).

(4) State whether cylinders are siamesed or each is completely surrounded by water jacket.

(5) State whether poppet, sleeve, rotary, piston or other type of valve is used; also location with respect to cylinder head.

(7) Weight of piston with rings and pin should include weight of screws or other fastening for holding wrist-pin in place or bushings for wrist-pin bearing if used. *Record all weights in pounds and decimal parts thereof.*

For length of piston give measurement of cylindrical surface parallel to axis of cylinder.

(8) Under "type" of piston rings, specify such items as concentric, eccentric, single or multiple.

(9) In giving weight of connecting-rod include weight of big-end bearing and bolts and bushing in upper end of rod, together with screw (if any) for locking same; also weight of any oil pipe or scoop normally attached to rod.

(10) Give inside diameter of bushings which form the piston-pin bearings.

(13-14) Give maximum outside diameter of valves and minimum inside diameter of opening.

(16) To determine valve-timing, mark top- and lower-center on flywheel; also the points at which each valve opens and closes (valves cold). Then measure with flexible steel scale or tape the length of arc on rim of flywheel (in inches) from centers, as indicated, to marks indicating opening and closing.

(17) In recording weight of motor include carbureter, magneto, ignition accessories mechanically attached, water and oil pumps manifolds, flywheel and all parts necessary for normal functioning of motor.

(19) Under "how heated" state whether water-jacket is used, and whether all or a portion of air is heated.

(20) Under "general principles of operation" give items such as the following:

Venturi-tube type with single adjustable nozzle and single auxiliary air-valve with one spring.

Straight-tube type, four non-adjustable nozzles coming into operation successively as air-flow increases.

Expanding type, weighted-valve controlling air and gasoline supply simultaneously.

Digitized by Google

(21) Under "general description of intake pipe" give approximate average inside diameter and particulars, such as:

Horizontal distributing pipe about 1¼" I. D. with jacketed 6" vertical riser from carbureter and four short branches to cylinders.

Make small sketch when not easily described.

(22) Under "type of ignition" give particulars only of system actually used in test, *e.g.*,

(*Make*) high-tension magneto, single (or two) spark.

(*Make*) four-unit coil, six-volt lead battery.

Under "Weight" give weight of parts mechanically connected to motor.

(23) Under "type of distributor" give, *e.g.*, high-tension incorporated in magneto.

(24) Under spark timing give maximum degrees advance (*i.e.* degrees before center) and retard (*i.e.* degrees after center) on flywheel at which spark occurs.

(25) Under "type of spark plug" give kind of insulation (*i.e.* porcelain or mica) and number of sparking points on electrodes.

(27) Under "lubricating system" give particulars such as:

Force feed, splash, kind of pump, course taken by oil.

For example: Oil in sump forced by gear pump to main bearings under three pounds' pressure, thence through drilled crankshaft to crank-pins. Other parts lubricated by splash from constant trough level. Oil overflowing trough returns through strainer to sump.

FORM NO. 2

The following notes apply to column heads on Motor Testing Form No. 2:

Each run should be given a number for convenience in referring to the original data sheets.

The time of day at which the run is started should be recorded.

No space is provided for the time (of day) at which the run is ended, but this reading should be recorded on the log-sheet so that the precise duration can be checked.

R.P.M. should be invariably taken from positively driven counters which engage at the beginning of the run and disengage at the end of the run. The difference between the two readings, divided by the length of run in minutes then gives the *true average* speed. Tachometers, even when carefully calibrated, are subject to possible variations, which render them unreliable; hence the necessity of using a counter for all precise records of revolutions in a given time.

Readings of pull on the brake-arm should be checked by platform scales whenever possible. A spring-balance may be used but in this case it should be carefully checked at frequent intervals. A tripod placed on a platform scale and arranged in such a way that the arm of the dyna-

Digitized by Google

GASOLINE MOTOR TESTING FORM No. 2.

PAGE _____

TEST NO. _____

DATE _____

DATA TAKEN IN TEST OF _____

FOR DETAILS OF MOTOR AND ACCESSORIES, AND CURVES SEE FORMS NOS. 1 AND 3

BRAKE—HORSEPOWER TEST*

RUN NO.	TIME OF DAY H. M. S.	DURATION OF RUN MIN.†	REV. PER MIN.	LBS. PULL AT 63.625 IN. RADIUS	BRAKE H. P.	TEMPERATURES F°			LBS. FUEL CONSUMED		REMARKS
						AIR ENT. CARB.	JACKET-WATER				
							IN	OUT	PER HOUR	PER B.H.P. HOUR	

FRICTION—HORSEPOWER TEST (MOTOR DRIVEN BY DYNAMOMETER)

RUN NO.	TIME OF DAY H. M. S.	DURATION OF RUN MIN.	REV. PER MIN.	LBS. PULL AT 63.625 IN. RADIUS	Friction H. P.	I.H.P. = F. H.P. + B.H.P.	MEAN TEMP. F° JACKET-WATER	REMARKS

*Brake-horsepower should not be recorded on forms 2 or 3 until the motor has been run in sufficiently to show no appreciable difference in friction before and after a run of thirty minutes at the speed of maximum torque with the throttle wide-open.

† The duration of brake-horsepower tests recorded on this form should in no case be less than three minutes and where fuel is measured not less than five minutes. The duration of friction-horse-power tests should not be less than one minute.

With a Brake-Arm 63.625 in. Long, $\frac{\text{LBS. PULL} \times \text{R. P. M.}}{550}$ = H. P., and Lbs. Pull × 5.25 = Torque in Lbs-Ft.

mometer is connected to it by a suspended spring-balance is recommended. The spring-balance should be connected to a knife-edge at the proper point on the dynamometer arm. A suitable counterbalance is then arranged to compensate for the weight of the tripod and the balance, so that the scale balances at zero when the dynamometer arm is disconnected. When so arranged the spring-balance gives a quick reading of pull sufficiently accurate for preliminary tests, and also serves to cushion the platform scale from shock and vibration which might otherwise be transmitted

Digitized by Google

to it. When adjustments are completed and final readings are to be recorded, these are taken directly from the platform scale, which is kept balanced. Thus the possibility of error through the use of the spring-balance is eliminated.

BALANCING DYNAMOMETER

Before any readings of torque are recorded, great care should be exercised to see that the dynamometer itself is properly balanced. With the electric-cradle type of dynamometer this balancing is accomplished as follows:

The dynamometer is allowed to run idle as a motor (drawing current from the line) and a suitable counterbalance on the field frame—which should be perfectly free to turn within limits in ball bearing trunnions—is then adjusted so that the platform scale reads zero. This reading should be obtained with the dynamometer rotating first in one direction and then in the other. The reaction of the armature on the field frame will exactly balance the friction of the brushes and armature bearings carried in the field frame. With the armature still rotating, check-weights (or pieces of metal having a known weight) should be hung from the knife-edge on the dynamometer arm. If the reading recorded by the platform scale is equal to the known weight applied, the dynamometer may be considered as balanced.

TEMPERATURES

A reliable straight glass stem thermometer should be placed near the carbureter air-inlet in order to measure the temperature of the air entering. This thermometer should be read at least once during each run.

Thermometers should also be placed in suitable wells or sockets, one near the inlet of the pump, and another as close as possible to the water-outlet of the motor. These wells or sockets should be in pipes that run full, so that water continually circulates about them. They should be filled with oil or mercury, and careful readings taken at least once during each run.

Note.—In order to approximate as nearly as possible road conditions, cold water from the city main should not be allowed to enter the cylinder jackets without first being mixed with warmer water from the outlet of the cooling system. This may be accomplished by allowing the hot water from the motor to discharge into a tank with a filler pipe near the top. Sufficient cold water is then added to the hot water entering the tank to obtain the desired inlet-water temperature. For motors with forced circulation the inlet-water temperature should preferably not fall below 120° F., and for motors with thermosyphon cooling below 80° or 90° F.

FUEL CONSUMPTION

Fuel consumption is best measured by noting the decrease in weight of a tank from which fuel to the carbureter is being drawn. The tank should be placed on sensitive platform scales at a proper level above the carbureter, and connected to the fuel-supply pipe by a short horizontal length of rubber tubing. This tubing should be very flexible and should

Digitized by Google

not be drawn so taut as to interfere with the weighing. Weighings should be made as follows:

Set counterpoise so that scale-beam will fall just as the run is started. Note the setting and the time at which the scale-beam falls. Move the counterpoise back to the next pound mark, or to such a point that it will fall just before the end of the run, and note carefully the time when beam again falls. From the difference between the two times and the two weights recorded, the fuel consumption per hour can be readily determined.

FRICTION-HORSEPOWER

Friction-horsepower of a motor can be best measured by means of an electric dynamometer, preferably of the cradle type. The dynamometer is used to drive the engine under test at various speeds, and the torque reaction measured. This will be in the opposite direction to that obtaining while the motor is driving the dynamometer, so that provision must be made for weighing the torque on both sides of the dynamometer, or else suitable linkage must be provided to change the direction of the pull. The test for friction-horsepower should be made immediately after the brake-horsepower test, and before the motor has cooled, in order to keep the condition of the lubricating oil and friction obtaining when the parts are hot as near as the running condition as possible. During this test the throttle of the motor should remain wide open. Compression cocks should remain closed and all accessories, such as magneto, pumps, etc., used during the brake-horsepower test should be in operation.

INDICATED-HORSEPOWER

The approximate indicated-horsepower is obtained by adding to the brake-horsepower at any given speed the friction-horsepower obtained at the same speed.

If the friction-horsepower and brake-horsepower tests are not made at exactly the same speeds, the friction-horsepower at any given speed can be obtained by the use of the curves plotted on Form No. 3. Difficult interpolation is thus avoided.

MEAN TEMPERATURE OF JACKET-WATER

During the friction-horsepower tests the mean temperature of the jacket-water should be recorded. If the water is circulating the average of the inlet and outlet temperatures may be taken as the mean temperature. If thermosyphon circulation is used the water will not circulate during the friction-horsepower runs, and the mean jacket-water temperature should be taken if possible by inserting a thermometer into the jacket space and noting the average temperature.

FORM NO. 3

In using hydrometer to measure gravity of fuel, care should be taken to record fuel temperature.

After word "dynamometer" give type and name of brake used.

Length of brake-arm.—For ease in computing, a brake-arm having a

Digitized by Google

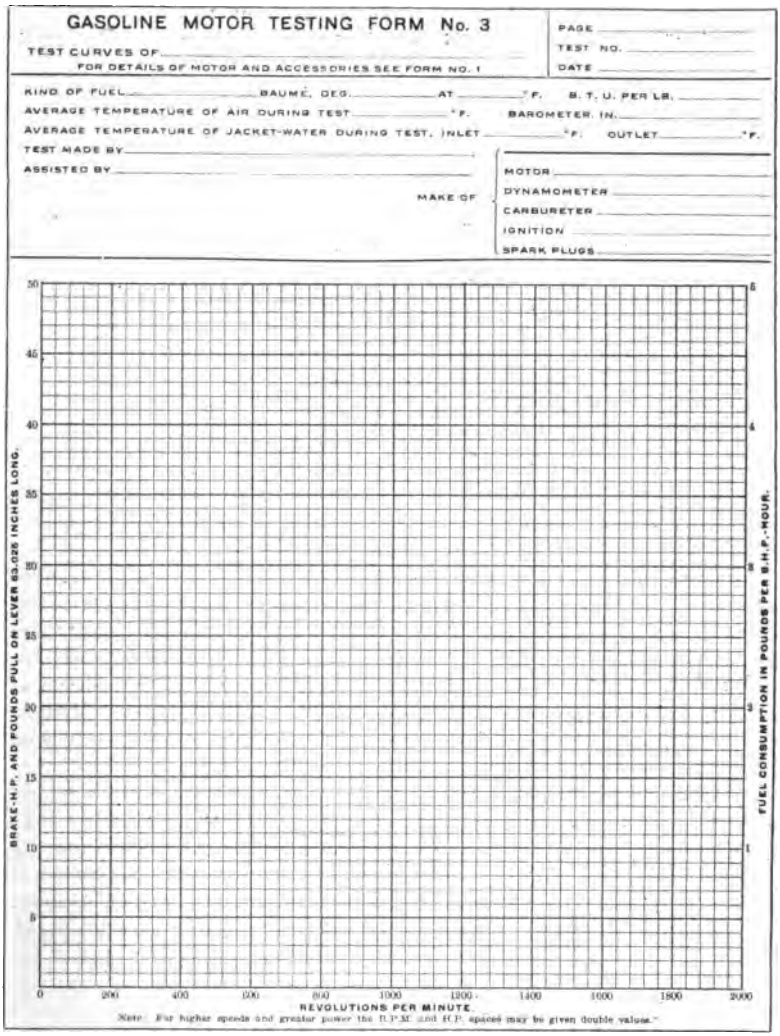

length of 63.025 inches (measured horizontally from center of dynamometer shaft to point where arm rests upon or is connected to scale) is most convenient. With this length of arm, to find the horsepower, it is only necessary to multiply the pounds pull, measured by the dynamometer, by the r.p.m. and point off three places (*i. e.* divide by 1000).

To obtain the torque of the motor in *pounds-feet* from the pull recorded on an arm of this length, multiply the reading by $\frac{63.025}{12} = 5.25$.

Digitized by Google

For an arm 31.513 inches long, horsepower $= \frac{\text{pull} \times \text{r.p.m.}}{2000}$. For other lengths of arm use the formula $\text{H.P.} = \frac{\text{pull} \times \text{r.p.m.} \times 2\pi \times R}{33{,}000}$ where $R =$ length of brake-arm in *feet*.

Note.—With an arm 63.025 inches long the pull for a given horsepower is inversely proportional to the speed. For this reason the same ordinate may be used to designate pull and horsepower on a curve plotted with r.p.m. as abscissae.

DISCUSSION

J. O. HEINZE:—Mr. Chairman, I was not able to devote much time to the Motor Testing Division work during the last four or five months and requested Mr. Chase to carry on the work. I will ask him to explain the report which, as now submitted, is satisfactory to the Division, and we hope will be to the Standards Committee.

HERBERT CHASE:—The data sheets submitted herewith were accepted at the last meeting of the Society, with the understanding that the Motor Testing Division was to make certain minor changes. The latter have been made and for this reason the sheets have assumed a somewhat different form. We think they are very much improved. The sheets as printed have undergone some change today by action of the Division, but the changes are all of minor importance, having to do largely with form.*

If the instructions given with the forms are carefully followed, results of test reported to the Society should be uniform and readily comparable.

Form No. 2 is quite different in arrangement from the sheet that was presented at the winter meeting, but contains nearly all the data included on the sheet formerly. One important addition to it should be noted. It has to do with the duration of runs in which the readings reported are taken and the amount of running-in the motor has had before test; viz:

"The brake-horsepower should not be recorded on Forms 2 and 3 until the motor has been run in sufficiently to show no appreciable difference in friction before and after a run of thirty minutes at the speed of maximum torque with the throttle wide-open." It was thought that if a motor showed no decrease in friction in such a preliminary test, there would be an indication that it had been run-in sufficiently to get uniform results for recording.

It was also voted that "the duration of brake-horsepower tests recorded on this form should in no case be less than three minutes, and

*The sheets as printed in this volume of the Transactions incorporate the changes agreed upon at the Summer Meeting.

Digitized by Google

where fuel is measured less than five minutes." That was to avoid what are sometimes called snap readings of horsepower, which do not represent true average conditions.

"The duration of friction-horsepower tests should not be less than one minute." They can easily be made in one minute, and it is an advantage to have them short, so that they can be run off as quickly as possible after the brake-horsepower test, while the motor is still warm and the conditions as to friction are as near those that apply in the brake-horsepower test as possible.

CHAIRMAN SOUTHER:—Mr. Chase, is it the understanding of the committee that if all the information indicated upon the forms is not obtainable, that which can be obtained be furnished? In other words, it is desirable that the forms should be filled out completely, but if not, the test need not be abandoned entirely. Some of our members seem to think that if they cannot fill in every item, they should not fill in any of them. That is not the point at all. Here are forms indicated; go as far as you can with them.

HERBERT CHASE:—I think that it is the idea of the committee that the forms should be used for a number of different purposes; that many manufacturers will use them purely for their own convenience and information in their own laboratories, but of course it is hoped that many of the concerns represented in the Society will see fit to fill out the forms either completely or as fully as they feel they can and send them in to the Society office, so that some permanent records will be available as to the performance of certain definite types of motors.

CHAIRMAN SOUTHER:—The whole idea is to get readily comparable results presented in the same language and same terms. Now some report gallons per horsepower-hour, others pounds and others something else. If we get uniformity, our translation of results and our understanding of them will be much more complete.

C. W. MCKINLEY:—I suggest that some methods of binding the forms be provided.

HERBERT CHASE:—The forms are to be printed in loose-leaf form to fit a standard binder.

CHAIRMAN SOUTHER:—Are there any further remarks? If not this report will be submitted to the Council and to the Society for acceptance. Are there any objections?

J. O. HEINZE:—We have considered many modifications and finally concluded that we would eliminate matters of design entirely from the forms simply calling for a statement of the material, diameter and length, rather than the details of construction; for to write in all the various details might require an entire page of drawings and description. If you criticize the report adversely along these lines, I think we would keep on modifying it for a year and not get any sheet in printable shape. I could pick the report to pieces and after I had done so somebody else could pick my recommendations to pieces. Therefore, I believe that the report should be accepted. If we do not start now, we will never have a sheet.

Digitized by Google

A. P. BRUSH:—As I understand it, all of this work is looking towards increased standardization of the most satisfactory and least expensive types of construction throughout the industry. It seems to me that all the high-duty bearings on the motor, such as piston-pins, crank-pins and crankshaft bearings, are really worthy of reasonably specific mention in a report of this kind. I think that, as Mr. Heinze says, you can very easily go too far. I would not think of suggesting, for example, taking up stud and cap-screw dimensions on a motor; as Mr. Heinze very rightly says, you can make a volume of these reports. Yet I feel that the high-duty parts of the motor are worthy of space in the report and would regret the elimination of them.

HERBERT CHASE:—It should be borne in mind that these will be *commercial* testing forms and that it is the intention of the committee to get out another set of sheets which will go into much greater detail and be known as research test forms. It is impossible to elaborate much further on these sheets and keep them in a commercial form, so that they will be used every day.

CHAIRMAN SOUTHER:—Those in favor of submitting the report to the Council and the Society, signify by saying "aye"; opposed, "no." It is a vote.

DISCUSSION OF S. A. E. LOCK WASHER STANDARD

CHAIRMAN SOUTHER:—The matter of lock washer standardization has been quiet for about two years and now comes up again in rather a curious way. Last winter the chairman of the Lock Washer Division stated that he had no report to make, that there were very few orders for lock washers outside of the Society of Automobile Engineers standard. I requested him at that time to make that statement in writing. About the middle of April I received word from him that an increasing number of people were not using the S. A. E. washer standard and that he could not understand it. In a recent letter the only explanation he offered was that he had one or two very large contracts from very large users of lock washers who did not, for some reason or other, specify S. A. E. lock washers. Are there any here who have any criticism to make of the S. A. E. standard?

C. W. MCKINLEY:—I have had a great deal of trouble with a lot of ¼ and 5/16 light duty lock washers; after screwing the nuts down the washers opened up, becoming oval and losing their holding power.

CHAIRMAN SOUTHER:—In other words, they were of too light cross-section?

C. W. MCKINLEY:—Yes.

CHAIRMAN SOUTHER:—How about the other section?

C. W. MCKINLEY:—The other section seemed to stand up pretty well,

Digitized by Google

although it caused a great deal of cutting when it was disengaged, spoiled the surface.

CHAIRMAN SOUTHER:—Have you any suggestion as a remedy?

C. W. MCKINLEY:—None in particular, except in cases where that is objectionable, to use something different from the standard, a wider or a thicker lock washer. In my fittings I find that the heavy duty lock washer is very satisfactory.

CHAIRMAN SOUTHER:—The reason for there being two weights of lock washer is the fact that the light series is used with soft metals and the heavy series with harder metals. If the lighter series is too light for hard usage, that is what the heavy series is intended for. If, on the other hand, the lighter series is too light for any use, we ought to modify it. Have you any thought along that line?

C. W. MCKINLEY:—No, but I think the trouble is due to incorrect heat treatment of the washers.

CHAIRMAN SOUTHER:—What is the character of the trouble; drawing at too high a temperature, is it not?

C. W. MCKINLEY:—The trouble is very general in sizes below three-eighths in the light series.

CHAIRMAN SOUTHER:—The heavy series is all right?

C. W. MCKINLEY:—Yes.

CHAIRMAN SOUTHER:—If there are no further remarks we will transmit the comments received here to the committee and have them go over the smaller sizes of the light series. This is the first criticism we have had of that design, and it may be, as stated, a question of materials and treatment rather than dimensions.

C. W. SPICER:—I think the last suggestion is perhaps right, but we use a great many three-eighths and five-sixteenths, and are having, by watching our source of supply carefully, very little trouble. We find that even against steel they stand being set down and loosened up several times, with no serious difficulty even in the light section. I have seen in some cars the use of a still lighter section, which absolutely was no good.

A. P. BRUSH:—Do the S. A. E. specifications on lock washers go into detail enough to suggest the tensile strength of steel and heat treatment of it?

CHAIRMAN SOUTHER:—The temper and toughness tests are very carefully brought out in the standard, as follows:

"Temper Test:—After compression to flat, reaction shall be sufficient to indicate necessary spring power and on a subsequent compression to flat the lock washer shall manifest no appreciable loss in reaction." That is, that there shall be no setting.

"Toughness:—Forty-five per cent. of the lock washer, including one end, shall be firmly secured in a vise, and 45 per cent., including the other end, shall be secured firmly between parallel jaws of a wrench. Movement of the wrench at right angle to helical curve shall twist the lock washer through 45 degrees without sign of fracture, and shall twist the lock washer entirely apart within 135 degrees." This is the limit for brittleness and the limit for toughness.

Digitized by Google

A. P. BRUSH:—I have known of trouble in some of the heavier series with brittleness, and I wondered if the S. A. E. had gone far enough to at least make a suggestion of some analysis and heat treatment which might perhaps help make them more uniform.

Contributed by J. E. Wilson

There is a misconception among some lock washer users as to what may be expected of light-section lock washers of as small inside diameter as ¼ inch and 5/16 inch. These washers have little reactionary power as compared with the compressive power of the nut when screwed down. That they have locking power and are tough, is demonstrated by the tendency to open or deform without fracture upon unscrewing the nuts. The crushing or spreading under the nut pressure I attribute to the lightness of the section.

So far as temper is concerned, while modern methods of manufacture preclude any unreasonable fault in material or heat treatment, too much should not be expected of the 5/64 x 1/16 washer; it is little more than a thread. A wider section would obviate the spreading and also provide a better seat on soft backing. As we are limited in the O. D. to the long diameter of the nut, a thicker section, as provided in the S. A. E. heavy series, is the next best remedy. I have never seen the necessity of re-standardizing the thinner section as has been suggested, unless we were permitted to increase the outside diameter beyond that of the nuts, in which case very thin washers, for use against aluminum or brass backing, would have no tendency to spread and offer a fair amount of locking power.

COKER F. CLARKSON,
Secretary.

Digitized by Google

BUSINESS AND PROFESSIONAL SESSIONS OF SOCIETY MEETING

PRESIDENTIAL ADDRESS

Following the custom of my predecessors in the presidency, it is my privilege to address you at this time, touching upon some things that are of interest to all engineers.

Technically, I am not an engineer. No institution has ever given me a diploma. When I started my career in 1858 there were few schools where technical engineering was taught. The technical schools which are now found in almost every city and which for the most part are doing excellent work were unheard of in those days. The State universities where technical engineering is taught have all come into existence since that time, with perhaps two or three exceptions. The help that has been given by these institutions and the advantages which they confer upon the young man who is fortunate enough to avail himself of their instruction can hardly be over-estimated.

What little I know about engineering has come through long training in the workshop, in the manufacture of machinery, and in the part I have been able to take in the development and improvement of the engineering and manufacturing methods which during the last fifty years have been so pronounced. Therefore, in my talk to you today I will, if I may, draw upon conclusions reached through that long and varied experience, rather than from the standpoint of the trained engineer.

You hear and read so much pertaining to your profession in the meetings of your various organizations, local and national, and in the constant discussions of the unlimited details of automobile construction and engineering, that you will perhaps not be averse to a departure from the routine of your accustomed discussion. With your permission I will discuss the matter from a somewhat different and, in some phases perhaps, a broader outlook than the strictly engineering view usually presents.

It is no reflection upon our engineering society to point out that there is a broader field than is covered by the strictly technical discussions which usually claim our attention. However, before discussing this broader field let me say (and I feel I am not overstating the matter with reference to the importance of the great engineering profession to which you belong) that looking at

Digitized by Google

our great world-wide civilization as a huge and mighty pyramid I believe the engineering profession stands at the very top of that pyramid. In view of the great achievements accomplished by the engineering profession this is a true statement. All the really great achievements which the world enjoys may justly be placed to the credit of the engineering profession, whether we consider the miracle of one of our magnificent steamships sailing up the Hudson or upon the Great Lakes, or one of the great ocean liners passing in sight of our convention hall, with its marvelous equipment, ponderous machinery, boilers, pumps, steering apparatus and everything else required to give speed to the ship, comfort and safety to the passengers and accommodations to carry the commerce of the world; or the mammoth locomotive which we look at with feeling akin to awe, as we see it slowly back up and attach itself to a train of heavily loaded freight cars a quarter of a mile or more in length, and then slowly revolve its wheels and move away with an almost incomprehensible mass of merchandise, constantly increasing its speed until it really flies on its way to the markets of the world.

Or whether we look with wonder and admiration upon the great bridge connecting two great cities like New York and Brooklyn, with its different decks for foot passengers, carriages, automobiles, trucks and street cars. Or whether we consider the tubes under the North or East River, with the myriad boats and ships of all types and sizes sailing above. Or the great subway, burrowing underneath the busy streets while the giant buildings stretch far up into the blue sky above—with its rapidly moving trains propelled by electricity at the speed of a mile a minute, carrying people by the hundreds of thousands in safety to destination. Or whether we consider what is, perhaps, the climax of all recent engineering feats, the great Panama Canal, of difficult, untried and mammoth problems, which have finally been successfully solved.

For each and all these things the world must give credit to the engineering profession. To the engineers are we indebted also for the great cables which unite and bring into almost the close intimacy of neighborhoods the continents and islands of the sea. We remember also the telephone and the telegraph, and the mighty forces of electricity in their almost incomprehensible applications; how all these things minister to human needs and comforts. All this and much more is the work of the engineer. Should some man be inspired to write a just and fitting tribute to the engineering profession as a whole he could hardly overstate either the marvels of achievement or the almost incomprehensible advantages and pleasures which we enjoy therethrough. All these have been brought into the life of the people by the engineering profession of the twentieth century.

Digitized by Google

Nevertheless, great and valuable as have been the achievements of the engineer, I believe there is a larger field which he may occupy if he will. This relates to the engineer rather than to his achievements. To wrest from nature the secrets of matter and forces and to bring order out of chaos is a great satisfaction. To investigate, to contemplate, to labor and bring forth the ideal is the task of the engineer. From the vantage point of my years and my experience, may I suggest to you engineers of a new industry, that in the whole realm of engineering there is no problem so worthy of your skill and ingenuity, and no need so pressing, as that of producing men, not things? No task is so complex and no reward is so great as that which comes to the man who successfully engineers his own life to a higher type of character. In the laboratory of daily life, with the mind, heart and conscience as tools, we should, as engineers of the greatest things, convert our baser tendencies and impulses into the noblest realities.

To every man who has a real earnest desire to make the most of himself (if that is his aim he is an engineer) and to fill to the full the most important niche to which he may aspire, there is a free course and a fair field. It is great to be an engineer. It is greater to be a man—a great, broad, full-measured man. This is the great calling. This is the great engineering feat, and he who would accomplish it must, in all life's great problems, in his dealings with his fellows, in his treatment of those beneath him in rank, in his treatment of the weak and unfortunate, in his walk with his equals and superiors cultivate personal qualities of justice and mercy, fair play and courtesy.

May I express the hope that you men, whose genius and application have in so short a time created from nothing the wonderful automobile industry, will give to the industry such an indelible stamp of personal integrity, uplift and character that our industry shall stand as a type of the highest and best, as it is now the newest. With clean manhood as the starting point, and equipment of theoretical and practical training, we shall be well qualified to enter upon work in life and become successful manufacturers or business men. To be a successful business man is more than to amass large dividends. One may distribute enormous dividends and still be a failure as a business man. On the other hand, "big business" is not criminal or wrong merely because of its bigness. Every red-blooded man will aspire to a position or business so large that it will tax his whole being to master it. I know of no more important or useful member of society than the successful manufacturer or business man who is actually producing, devising or supplying some useful thing; it matters little what, so long as the thing produced fills some real need or want and does not in any way degrade or destroy the best ideals of normal human life. The business man or manufacturer

Digitized by Google

who thus produces materials and is honest and square in all dealings, and fair, just and true to every need and requirement of society, is the most important person, and really does the most for society and the world of any human being.

There is an old saying, "He who makes two blades of grass grow where only one grew before is a benefactor to the human family." I think this statement is just as true of horses, or cows, or sheep. It is just as true of houses and steamships and locomotives, and bridges, of machines, of stores, of factories, and of anything which supplies a legitimate need.

If this be true, may I elevate to the very pinnacle of our pyramid such a business man or such a manufacturer? I am painfully aware that in some places "big business" is unpopular, and that the war-cry of the demagogue, the cheap politician and the sensational press is a blatant and hysterical tirade against successful business. I beg of you not to allow yourselves to be influenced or disturbed by this hysteria. I have been singularly blessed for thirty years with opportunities of mingling with so-called big business men and manufacturers, and I can say to you in all candor and with all the sincerity of which I am capable, that I have found them as a whole (of course, there are some despicable exceptions) the noblest, the most generous, the most honorable and the most just men it has ever been my privilege to meet. I do not except the men of any other calling or profession, whether lawyers, doctors, ministers, college professors, congressmen, senators, or any other class. In all the personal qualities which right-minded men admire, and in activities which make a community prosperous and happy, I have found these big business men superior. I trust you may each be enrolled among them.

Further, notwithstanding popular clamor I can assure you positively that these men of whom I am speaking have done more than all other influences combined to make the American workman the best housed, the best clothed, the best fed and the recipient of the most comforts and luxuries in his home and factory environment of any workman on earth.

We should not be unmindful of the obligation we owe to the laboring man, or of our dependence upon him, but how fallacious is the notion now being promulgated that labor itself produces all wealth. Some so-called philosophers are even now getting ready to divide all wealth that all men may be on one common financial level. All wealth and all the useful things ever made, or that ever will be made by men in this universe, have been made by labor plus brains, by labor plus will, by labor guided and controlled by experience, training, initiative, and by the persistency of that living, breathing nature by which some men naturally lead and others naturally follow, by which some best plan and others best execute.

Digitized by Google

Perhaps more closely related to engineering interests is our affiliation as engineers. It was my privilege in 1910 to be entertained, with some of you, by the Institute of Engineers of Great Britain, with a large party of the members of the American Society of Mechanical Engineers. In the summer of 1913 I again had the privilege of going with members of the same society when we were entertained by the German Engineering Society in twelve of the principal cities of Germany. We were most royally entertained, and the trip from the beginning revealed most interesting experiences for a mechanical engineer. One thing that impressed itself very strongly upon me was the greater and better standing which the engineers of both Germany and England seem to have with their governments and communities, as compared with the condition in our country. We were informed repeatedly that whenever the government had in contemplation any great engineering feat, or, in fact, any engineering problem, the authorities having the matter in charge invariably went to the officers of the engineering society and counselled with them in reference to the project and the men whom they should choose to carry out the work.

In many other ways we saw unmistakable evidence of the better standing of the engineering profession in both these countries than we enjoy here in the United States. In casting about for a reason for this it occurred to me that it may be due to the fact that in both these countries all the various kinds of engineers are merged together in one great national engineering organization. I presume that each of the various organizations, such as those of the automobile engineers, the electrical engineers, the mechanical engineers, etc., has its own local divisions for conference and discussion. They are, however, all also interested in the great federation of engineers and meetings of this larger and more important organization are held periodically. This gives far-reaching and important dignity and standing to the profession. I hope that measures will be taken in the not distant future to have all engineering societies in the United States join in a like organization.

I have been asked to discuss the comparative efficiency of the engineers of either Germany or England and of the United States. I am not prepared to speak finally of this, although I was impressed with the thoroughness and conscientious achievements of the engineers in both the foreign countries mentioned. I believe that the American engineers are as a whole much farther advanced in efficiency and economical achievement than either the German or the English engineers. During our long stay abroad we were asked many times why our manufacturers often secure large contracts which it seemed to the Europeans should naturally go to them, such as for building railroads, or bridges, or for

Digitized by Google

locomotives, in some of their remote colonies or possessions. At one of the largest banquets at which we were the guests we agreed, at their suggestion, to answer this question. Professor Frederick Remsen Hutton, who, as you know, is amply qualified to speak for our industries, explained fully the reason the stated condition prevails. It was briefly this:

By way of illustration, in a certain contract for a bridge to be placed across a chasm in South Africa, those responsible for building the structure had their engineers draw complete detail specifications of the bridge, and forwarded them to the English contractors as well as to the American contractors. The English contractors immediately set about supplying the identical material precisely as specified, making specially each and every piece accordingly. This meant going into their warehouses for the raw material and making up new each piece just as called for.

The American contractors proceeded upon an entirely different basis. They paid very little attention to the details specified, but immediately submitted another plan providing the same length of span and load-carrying capacity as had been specified, but requiring only standard stock material lying all completed in their yards, paying no attention to the peculiar shapes and exact forms and dimensions which had been specified by the engineers in Africa.

Basing estimates on practically standardized parts made in considerable quantities, the Americans were able to quote a very much lower price and several months' quicker delivery of the material, thus securing the order. The people who received the bridge were thoroughly satisfied and pleased with it because it was just as good-looking, just as strong as the one their draftsmen had worked out and entirely adequate in every way.

The illustration goes a long way toward showing the difference in some of the engineering and manufacturing methods employed on the respective sides of the Atlantic. So much for standardization, in which we excel.

The automobile engineers of America have the greatest reason to be proud of the progress and development of their profession in the very few years of its existence. History has nothing to record to compare with it. This progress would not have been possible except for the peculiar genius of our trained young men, which enables them to think and act quickly and accurately.

Similarly, the members of the Society of Automobile Engineers have cause to feel proud of their organization, which has so quickly and thoroughly shaped itself into the technical heart and head of the industry. It draws together in personal fellowship all members of the great family. It unitedly solves the problems which none alone could master. To the active officers and to our administrative Council, the Standards and other committees, we are all under lasting obligation for the zeal and fidelity

Digitized by Google

with which they have devoted themselves to our interests. The benefits of the Society have been beyond words. May the future be still richer.

Let me leave you with Conwell's quotation from Bailey.

"Bailey was not one of our greatest writers, but after all, in this he was one of our best:

'We live in deeds, not years; in thoughts, not breaths;
In feelings, not in figures on a dial.
We should count time by heart-throbs.
He most lives
Who thinks most—feels the noblest—acts the best.'"

Gentlemen, if you forget everything else I say, don't forget these two lines; for if you think two thoughts where I think one, you live twice as much as I do in the same length of time.

"He most lives who thinks most.
Feels the noblest—acts the best."

HENRY M. LELAND.

TREASURER'S REPORT

The Treasurer's report was submitted, and on motion, duly seconded, accepted and ordered placed on file.*

REPORT OF TELLERS OF ELECTION OF MEMBERS

The detailed report of the Tellers of Election of Members was submitted and the election of members of various grades, since the last meeting of the Society, declared as follows:

Members	76
Associates	106
Juniors	15
Affiliate Members	3
Affiliate Members' Representatives	7
	207

SECRETARY CLARKSON:—Gentlemen, we have a very pleasant reminder of the visit of our British cousins last summer in the form of a memorial and the reading desk which is referred to therein.

A. B. CUMNER:—Mr. President, I move that a suitable acknowledgment of the gift be forwarded to the Secretary of the Institution of Automobile Engineers.

PRESIDENT LELAND:—You have heard the motion, gentlemen. Are there any remarks? The gift is exceptional, one we are surely very grateful for, as showing the thought and appreciation of our friends across the water. The dignity of the occasion calls for a rising vote. All those in favor of the motion will please rise.

(The motion was unanimously carried by a rising vote.)

*The Treasurer's last report appears on page 240.

Digitized by Google

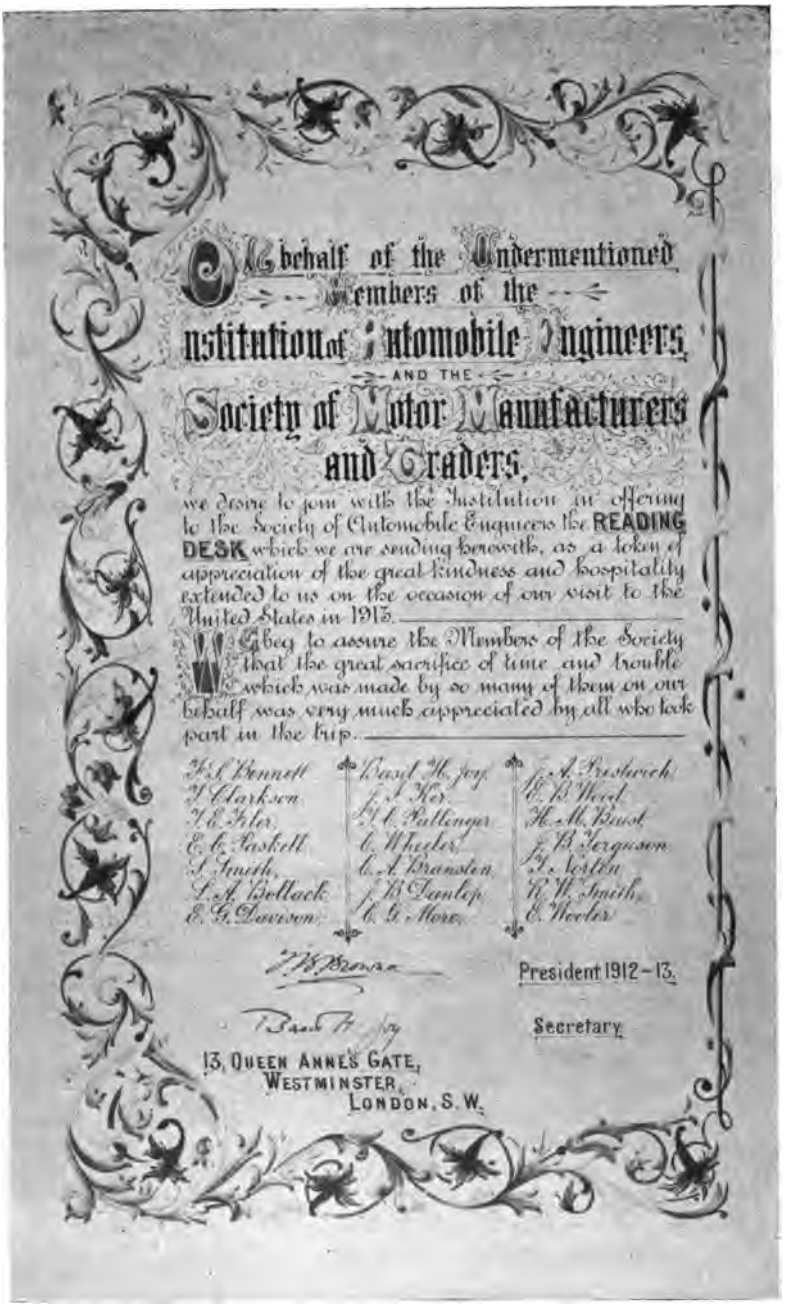

On behalf of the Undermentioned Members of the Institution of Automobile Engineers, AND THE Society of Motor Manufacturers and Traders,

we desire to join with the Institution in offering to the Society of Automobile Engineers the **READING DESK** which we are sending herewith, as a token of appreciation of the great kindness and hospitality extended to us on the occasion of our visit to the United States in 1913.

We beg to assure the Members of the Society that the great sacrifice of time and trouble which was made by so many of them on our behalf was very much appreciated by all who took part in the trip.

F. S. Bennett	David H. Joy	J. A. Prestwich
T. Clarkson	J. Ker	E. B. Wood
T. C. Iden	J. C. Pallenger	H. M. Brust
E. C. Paskell	C. Wheeler	J. B. Ferguson
S. Smith	C. A. Branston	J. Norton
L. A. Bellock	J. B. Dunlop	R. W. Smith
E. G. Davison	C. G. Moore	E. Weeler

President 1912–13.

Secretary.

13, Queen Anne's Gate,
Westminster,
London, S.W.

Digitized by Google

Reading Desk Presented by Members of the I. A. E. and S. M. M. T.

Digitized by Google

DISCUSSION OF PROPOSED CONSTITUTIONAL AMENDMENT*

NOMINATING COMMITTEE

F. E. MOSKOVICS:—Referring to paragraph 50 of the present Constitution, on behalf of Past President Marmon, I present a resolution. He knew the trials and tribulations of the president in appointing various committees, especially the Nominating Committee. There has been considerable discussion among the members of the Society as to the president appointing the Nominating Committee and it has been suggested that other means be employed. The resolution I present would eliminate the words "Nominating Committee" in C 50 and substitute for C 51, which, will be eliminated under the proposed amendment, a provision that the Nominating Committee be constituted of seven members, elected annually, each Section of the Society electing one member of the same, and in the event of there being more than seven Sections, the Sections with the largest membership, and in case there are not enough Sections to thus obtain seven members, the members necessary to make up seven being elected at the midsummer business meeting of the Society. It is thought that this would be a more democratic way.

W. G. WALL:—I wish to second the motion which has been presented by Mr. Moskovics. I believe that nothing more important has come before the Society since its inception. As you know, the Constitution now provides for a Nominating Committee to be appointed by the President. In the past we have done very well. Years ago the Society was small and it was very easy to talk over matters of importance. Now, however, it has risen from a mere handful to a great organization, so that it is impossible for us to get together and talk over things as we would like. Cliques are likely to arise, and there will be a certain amount of politics. Of course, politics are not necessarily disadvantageous unless of the wrong kind. Accordingly this amendment has been submitted.

The method suggested in this constitutional amendment might be improved on, but it certainly would provide a great improvement over what we have now. I am very heartily in favor of it.

The Council can, as you know, at any time change the Bylaws and we want the provision made in the Constitution which cannot be changed without the Members' consent; so that the Members can select their own Nominating Committee, which will nominate their officers. Some of you will, of course, say that we have gotten along very nicely in the past. We have, but I tell you this is due very much to the grace of God in giving us such good men for Presidents. The provision of the present Constitution is likely to cause a certain kind of difficulty at any time. Therefore I think we should put through the proposed amendment.

C. E. DAVIS:—The motion appeals to me as logical. The enterprise in which we are all connected as engineers is widespread. At the same

* The Constitution of the Society as revised in August, 1914, appears on page 344.

Digitized by Google

time there are concentrated in certain parts of the United States large numbers of men who are vitally interested in this enterprise, and in the primary formation of a board of officers they rightfully should have a vote.

It is true, as has been stated, that we have had no difficulty in the past, but as our organization expands it seems to me desirable that the matter of the selection of the officers of the Society should be brought before the different Sections for consideration; that they should have the privilege and it should be incumbent upon them to send men to co-operate in the selection of officers in a way that would induce men of the strongest character to head our Society. I therefore very gladly second the motion.

PRESIDENT LELAND:—Gentlemen, you have heard the remarks. We want to have a free discussion on this matter. Now is the time to talk about it. I hope everybody will speak freely.

R. McA. LLOYD:—I question the advisability of making the change in the Constitution presented here. It is customary in almost all bodies like ours to have a Nominating Committee appointed by the current officers, and if members want to get up another ticket they can do so. Under the Constitution as it is now "Twenty or more members entitled to vote may constitute themselves a special Nominating Committee, with the same power as the annual Nominating Committee." It seems to me that it is going to take up more time and a good deal more trouble to have the Sections and then the Society assembled in summer meeting vote on the membership of the Nominating Committee, with the idea that that is the only way we can get independent nominations. I think that it is always proper for the current officers to put up a ticket; then if others want to put up an opposition ticket there are always means provided for doing so.

W. G. WALL:—A good deal of coercion is required to get members together to put up an opposition ticket. It requires a good deal of red tape, and a ticket put up by the administration always has much more chance of being elected. Therefore I believe we should make the proposed change.

F. E. MOSKOVICS:—Mr. Lloyd has mentioned what is apparently an open course, but it takes considerable courage of the type for which the reward is hardly adequate. It is not so much that there is anything in the past that needs to be corrected as the future. The growth of the Society has been so rapid that it is almost like an overgrown child. I believe that the easier the channels through which the Society can express its preference in the matter of officers and the general conduct of the Society are made, the better off we are going to be; the less danger there will be of an administration perpetuating itself. The Society cannot be any stronger than the inclinations of the members. If our ideals are not high we will not be what we should be. The officers should be merely a reflection of the ideals of the members. I feel safe in saying that this is the unanimous opinion of the Indiana Section, which passed

Digitized by Google

a resolution in favor of the substance of the motion I have presented.

H. E. COFFIN:—As a Past President of the Society I have never felt that there was any danger of difficulty or trouble with the Constitution as it now stands in the respect under discussion. At the same time I have known that there was a feeling among the members that there was a possibility of danger. If there is a feeling of dissatisfaction on the part of some of the members with the present method of appointment of the Nominating Committee, it certainly cannot do any harm to so change the Constitution as to make the members thereof elective. I am not, however, in favor of doing it in exactly the way pointed out by the motion under discussion. I would like to ask what percentage of our membership is enrolled in the Sections at the present time. Certainly not half.

SECRETARY CLARKSON:—No, much less than half.

H. E. COFFIN:—We see immediately that in placing the power of election of officers in the hands of the Sections we would exclude at once perhaps three-fourths of our membership from any voice in their choice. All of us certainly want to avoid politics within the organization. We do not want two tickets in the field. It is all very well to say we can get up an additional ticket if we do not like the one chosen. As soon as we start that, we are going to introduce a lot of bad feeling, or be very apt to at least. We have been entirely free from that sort of thing in the past. If there is a feeling, as there apparently is, among the members that the old method of appointment of the Nominating Committee should be changed, it should be changed. But I believe we should not adopt the way that has been suggested.

F. E. MOSKOVICS:—There are at the present time only three Sections. Four members of the committee would be elected by the Society. With seven Sections in the Society the chances are that they would represent the majority. It seems to me that the election of officers should be in the hands of the men who take enough interest in the Society to attend its deliberations.

DAVID BEECROFT:—I am in favor of having the Nominating Committee enlarged. If it were an elective body all Members should have a free voice in the matter. With a committee of seven it would be wrong to have all seven elected by the Sections, which would exclude all individual members from voting directly. I believe that if our committee consist of seven, never more than four should be representatives of the Sections, and that those four should come from the Sections having the largest membership. There should never be fewer than three members of the committee elected by the Society at its summer meeting.

F. E. MOSKOVICS:—I can see no objection to accepting that as an amendment to my motion.

W. G. WALL:—I accept the amendment.

DAVID BEECROFT:—It has been suggested that it would be better than having four members elected by the Sections, to have three elected by the Sections and four by the Membership at large at the summer or semi-annual meeting of the Society; the three members elected by the Sections

Digitized by Google

to be elected prior to the time of the semi-annual meeting of the Society. I change my suggestion to that effect.

PRESIDENT LELAND:—Does that meet with your approval, Mr. Moskovics?

F. E. MOSKOVICS:—Yes, I will accept that amendment.

W. G. WALL:—It is satisfactory to me also.

PRESIDENT LELAND:—You have heard the motion as seconded and amended. Is there any further discussion? If not, are you ready for the question?

(The motion was put to a vote and carried unanimously.)

JUNIOR GRADE OF MEMBERSHIP

H. C. WILSON:—I move that the phraseology of C 10 be changed to read as follows:

"Junior grade shall be composed of persons who at the time of election are under twenty-six years of age, and qualified to fill subordinate engineering positions in the automobile or allied industries, or who are regularly enrolled students at or graduates of a technical school. A junior member may upon reaching the age of twenty-six and shall upon reaching the age of thirty be transferred to Member or Associate grade in accordance with the decision of the Council as to which grade his qualifications entitle him."

This would permit a Junior to remain at his option a Junior until the age of thirty, at which time he would become a Member or Associate.

(The motion was seconded.)

H. E. COFFIN:—I would like to know the reason of the suggested change.

H. C. WILSON:—The Council has had requests from Juniors who have reached the age of twenty-six that they be not transferred to Member grade. In some cases they have not been prepared to assume additional financial obligation. Furthermore, the proposed change is in accordance with the procedure of practically all the other engineering societies. It would make it easier for a man to obtain standing in the Society, without putting a burden of about $10 a year more on him. We have a great many young men in the Society who have not reached a point at the age of twenty-six where they feel they want to assume that obligation.

H. L. CONNELL:—In the present tendency to raise the standards of the Society would it not be well also to give the Council power to keep a Junior a Junior until thirty? At twenty-six a Junior may not have reached the engineering standard entitling him to become a Member.

H. C. WILSON:—We wish to make it possible for a Junior who is qualified, when he passes the age of twenty-six, to go into Member grade (something for him to look forward to), but not to make it obligatory upon him to either assume this grade of membership or else be compelled to withdraw from the Society. The Council has no other alternative at present.

Digitized by Google

PRESIDENT LELAND:—Is there any further discussion, gentlemen? You have all heard the discussion of the motion made by Major Wilson. Are you ready for the question? All those in favor of the motion made by Mr. Wilson say "aye"; contrary "no." It is carried.

Are there other amendments, gentlemen?

STUDENT ENROLLMENT

W. G. WALL:—I offer this amendment.

Add to C 56 the following:

"The Council may further in its discretion authorize the enrollment, individually or by group, of persons under thirty years of age, who at the time of application shall be bona fide students at a recognized institution of engineering or pursuing a course of study in automobile engineering. Student enrollment shall be for the term of two years, which may upon application be extended by the Council for an additional two years. Enrolled students shall not be Members of the Society, or be entitled to vote or hold office."

The motion is also to add to C 22, under "Initiation Fees," "Student Enrollment, none."

Add to C 23 (Annual Dues), "Student Enrollment, $3."

It is proposed to have provided in the Bylaws that each applicant for student enrollment shall be endorsed by a member of the Society and approved by the Council. That enrolled students shall receive the regular monthly publication and may attend the meetings of the Society. That student enrollment shall be revocable at the pleasure of the Council.

PRESIDENT LELAND:—Gentlemen, you have heard the amendment moved by Mr. Wall.

A. B. CUMNER:—I second the motion.

H. E. COFFIN:—Why not make the term three years and have the term not renewable? It is not likely that a student in college would care to enroll for more than three years. It seems to me that it would be simply making work for the Council to have a term of enrollment run two years and be renewable for an additional term.

W. G. WALL:—I can see considerable logic in what Mr. Coffin has just said. I think that there is no great advantage in having the enrollment for two years and that probably it would be better to have it for three years, and not renewable.

PRESIDENT LELAND:—Do you accept Mr. Coffin's suggestion as an amendment to your motion?

W. C. WALL:—Yes.

PRESIDENT LELAND:—Is the seconder willing to so accept it?

A. B. CUMNER:—I am.

W. T. NORTON, JR.:—I would like to ask whether enrolled students would be entitled to the Data Sheets and the general information published at present.

SECRETARY CLARKSON:—No, the monthly Bulletin only and not the Transactions or Data Sheets.

Digitized by Google

DAVID BEECROFT:—Where would the line be drawn in deciding who shall be enrolled as a student?

H. C. WILSON:—Apparently there is no line drawn. If a man states that he is studying a book at night, he is pursuing a course in automobile engineering. The enrollment would be within the discretion of the Council.

C. E. DAVIS:—Would that not be governed automatically by the substance of the application presented?

H. C. WILSON:—It seems that the only control we would have is the endorsement of a member of the Society. The object is to afford all the educational advantage we can to the youngster; hence, on account of the need of something of the kind, we must depend largely upon the knowledge and endorsement of the man proposing him for enrollment.

PRESIDENT LELAND:—The enrolled students would be in no sense members. The purpose is simply to give them some assistance. Is there any further discussion?

JOHN O. HEINZE:—If the Society desires to assist students, it is perfectly possible for it to sell them its literature.

H. C. WILSON:—We would have missionary or recruiting ground in addition to helping those men who are interested in automobile work. We are not seeking profit out of the enrollment. The purpose is to assist young men who are interested.

DAVID BEECROFT:—This student enrollment is an excellent thing. I am heartily in favor of it. It will be of practical benefit to the Society. It will serve as a good feeder for membership at a very nominal expense to the Society. It will help in a lot of the work and activities the Sections have to carry on. I think it will be very valuable. The I. A. E. of England has a student membership which last year was very active. They had certain sessions of their own at which they took up problems having a direct bearing on the work of the parent society. A student membership could carry on the same work in this country.

W. H. CONANT:—I think that perhaps the best answer to one of the last speakers is to be found in the proposed C 2 of the Constitution: "The object of the Society is to promote the Arts and Sciences and Standards and Engineering Practices connected with the design and construction of automobiles." Further this paragraph reads: "The principal means for this purpose shall be the holding of meetings for the reading and discussion of professional papers and reports." The Society must depend upon young blood for the very near future.

PRESIDENT LELAND:—Are you ready for the question?

(The question was called for.)

You have heard the motion made by Mr. Wall and seconded and amended. It has been carefully and thoroughly discussed. All those in favor of the motion manifest it by saying "aye"; contrary "no." The motion is carried.

Amendment as Amended Approved

HENRY SOUTHER:—Mr. President, the whole amendment as printed in

Digitized by Google

pamphlet form and distributed at this and the last meeting of this Society, has been very carefully prepared by a competent committee. I would like to move that it be accepted as printed and amended at this meeting.

(The motion was seconded by E. S. Foljambe.)

PRESIDENT LELAND:—Is there any discussion of Mr. Souther's motion? Are you ready for the question?

(The question was called for.)

All those in favor of the motion made by Mr. Souther will manifest it by saying "aye"; contrary "no."

The motion is carried.

(Councilor Baker assumed the chair.)

DISCUSSION OF BROACHES DIVISION REPORT*

FOUR-SPLINE PRACTICE.

C. W. SPICER:—The situation was canvassed as thoroughly as we knew how. The four-spline fittings shown in table 4B are as close as it was possible to get to the present practice, and, we believe, are suitable for adoption from both engineering and practical standpoints. In the report the 4A table was added as corresponding to the 6A, which table has already been adopted as recommended practice for permanent fittings. If there are any questions on this part of the report, I would be glad to answer them.

CHAIRMAN BAKER:—Are there any questions?

Upon motion, duly seconded, it was voted that the report of the Broaches Division as to four-spline practice be accepted.

CASTLE NUT ON TAPER FITTINGS.

C. W. SPICER:—You are probably all interested in data sheet 7A. The report shows some important changes in the nut shown in 7 and 7A in connection with the permanent fittings. The plain nut has given good satisfaction in some cases, while in other cases there has been trouble on account of the nut working loose, since the cotter pin does not prevent the nut loosening slightly. For that reason a castle nut seems to be desirable. We offer a new table that is practically a duplicate of the previous table, with the exception that the castle nut is shown, it being interchangeable with the plain nut heretofore shown. The Division wish to say that this is a construction that is in regular use by the Timken Detroit Axle Company and others. It is a matter that should be acted upon promptly; the committee would also like instructions whether the castle nut shall be shown in addition to the plain nut, thus giving an alter-

*For text of the report see page 1.

Digitized by Google

native standard, or for conservative reasons the castle nut shall be approved as recommended practice in all cases, and the table referring to the same substituted for that now on data sheet 7 of square fittings and on 7A of taper fittings.

W. F. HERST:—I believe that the castle nut should replace the plain nut. We have made an effort to adopt S. A. E. standards throughout in all of our work and have changed all blueprints that we send out to the trade to show S. A. E. standard tapers instead of the squares that we showed formerly. But when we came to the question of the nut we adopted the castle nut. We do not consider it advisable under any circumstances to use a plain nut.

C. E. DAVIS:—It seems to me that it is desirable to make the castle nut an addition to the plain nut standard. There may be conditions in designing where it will be unnecessary to use a castle nut. We should have as standard a castle and a plain nut, the machine work on which would be identical with the exception of the castellation. I therefore move the adoption of the castle nut as an addition to the previously accepted recommendation.

(The motion was seconded.)

C. W. SPICER:—I may say in connection with this that since the forms are interchangeable, if for various reasons we wish to recommend the castle form exclusively, there still would be nothing to prevent any manufacturer from using the plain nut if he wished to do so; it seems to me that the castle nut should be recommended practice, even if not used in every case.

(The motion was put to a vote and carried.)

(President Leland assumed the chair.)

DISCUSSION OF IRON AND STEEL DIVISION REPORT*

HENRY SOUTHER:—The work of the Iron and Steel Division has been continued, the principal object aimed at during the year having been to get together the data necessary for the members to have in order that they may know just what the S. A. E. steels or steels like the S. A. E. steels will do when subjected to various treatments, annealing, quenching and so on. That has been a big undertaking. The method pursued has been to prepare blanks, which, if filled out or even partially filled out, will give the committee the data necessary. We propose to lay before you a series of curves for each grade of steel, so that you can see very clearly and in a very practical manner just what may be expected of each quality of steel under a given treatment, the treatment being specified on the curves, as well as the results obtained. Sample copies of such curves have been laid before you, and the work is well under way.

*For text of the report, see page 7.

Digitized by Google

Some have stated in reply to requests that they fill out and return the forms that they do not use S. A. E. steels. The facts are that they do not call them S. A. E. steels, but they do use them. That is, the steels are of the same composition, and they used treatments similar to the S. A. E. treatments. That being the case, all they need do is to send in the results they get from certain grades of steel. The Division will judge what use to make of the data.

There must not be any mistaken idea of the kind indicated. S. A. E. steels cover nearly every steel on the map, and if any one uses and treats steel, we can make use of the data obtained. The misconception has caused us a good deal of delay and annoyance.

Other action has come up in the natural course of business. One is the elimination of a large number of specifications for the simple reason that they are found by actual experience to be superfluous. People do not use them, therefore why continue them? When they were first printed it seemed that they might be used, but experience shows that they have not been and that the number of steels is diminishing each year. Consequently some unnecessary steels have been eliminated from the specifications.

Further, the method of naming the steels has been changed very slightly. It was the habit to call a carbon steel 10-20, meaning that it was a carbon steel of 20 carbon. But that is confusing, because many people call steels "10 to 20 carbon." So we will merely drop the dash, and it is 1020, that is, without the dash; practically no change at all in that respect.

One other change has been made, and that is the acceptance of steels .005 per cent. higher in phosphorus and in sulphur than before. The reason is very clear. It is a very practical one and a very commercial one. It is that commercially no better results will be obtained from steels .005 per cent. purer in sulphur and in phosphorus. That prices on the S. A. E. standard steels will not be higher, at least, possibly a little lower, therefore there will be a commercial gain without a practical loss.

There is some feeling, if one can judge by the correspondence and remarks, that when we say that the steel shall contain not more than .045 phosphorus, we expect to get .045 all the time. That is not so at all. What it does mean is that no steel shall be accepted under the specifications that exceeds that limit.

A further complication is introduced by the chemical errors in analyses. Laboratories differ, let us say, in phosphorus determinations, and surely in sulphur determinations, at least .005. If they work within those limits they are doing splendidly. Now when we say .04, as we have in seasons past, the question arises, if steel comes .045, shall we accept it? Personally I have always said yes, unless it comes that way habitually, because I knew that it cut very little figure. The disposition of the committee is that .045 shall be specified and that that limit shall be lived up to strictly. So in reality the apparent lowering of purity is not a fact; it is entirely

Digitized by Google

a practical question. Some members seek exceedingly high results and produce goods perhaps considerably above the average; they may find it necessary or desirable to specify .01 phosphorus and .01 sulphur, or .02 phosphorus and .02 sulphur. There is nothing in the S. A. E. specifications that forbids that. That is entirely up to the man purchasing the material.

The question arises at once, is the S. A. E. backing steels that should not be backed, because they are not good steels? The committee believes not, and that belief has been reached after most exhaustive discussion and careful consideration by both consumer and producer.

The question of silico-manganese steels as peculiarly suitable for springs came up, as to whether there should be one, two or three specifications. After considerable correspondence it was decided that the committee should recommend but one, believing that with proper treatment sufficiently good springs can be made from it.

PRESIDENT LELAND:—Gentlemen, you have heard the report of the Iron and Steel Division. Is there any discussion? What will you do with the report?

HOWARD E. COFFIN:—I move that the report be accepted.

(The motion was seconded, put to a vote and carried.)

(Vice-President Wall assumed the chair.)

DISCUSSION OF ELECTRICAL EQUIPMENT DIVISION REPORT*

WIRING SYSTEM

CHAIRMAN WALL:—The report of the Electrical Equipment Division is open for discussion. We would like to have it threshed over thoroughly.

JOSEPH BIJUR:—In connection with the report of the Electrical Equipment Division I have been asked to give comments with regard to that portion of it which deals with the single-wire system. The company with which Mr. Kebler is connected has had a good deal of experience in preparing wire for cars, that is, wiring ready to put on cars, had experience very largely with two-wire systems in which no fuses were provided and no trouble was experienced. Mr. Kebler is distinctly and unqualifiedly opposed to the use of the single-wire system, involving the use, as he thinks, of fuses, whereas a two-wire system does not; and he is opposed to the single-wire system on the general danger of short-circuit.

F. E. MOSKOVICS:—Mr. Chairman, I want to warn the Society against too rapid adoption of any standard. On the formation of the Electrical Equipment Division I was a member thereof. About the first thing we were going to standardize was the dimensions of generators and motors. With the broad diffusion of ideas on those points now, you can see that

*For text of the report, see page 17.

Digitized by Google

we would have been sorely limited, if we had actually attempted to do that. Starting motors and generators are made in every conceivable shape at this moment. I do not know of any two, hardly, that fit in the same place.

I hold no brief for the one-wire system or the two-wire system, but I do want to warn the Society against the adoption of a standard that has so many worthy opponents who seem to know what they are talking about. After experimenting some time with the one-wire system we have decided to fuse every circuit, which we did not start out to do. The Bosch Company have changed their designs and now fuse each circuit on their one-wire system. They did not start out with that idea. I have heard it said that all circuits ought to be fused. Mr. Bijur told me that they invariably do that on their two-wire systems. But it is a fact that the advantages in non-fusing of circuits are in favor of the two-wire system as against the one-wire.

W. H. CONANT:—I fear that the impression is being gained that the Electrical Equipment Division desires this standard—is trying to give it to the Society. That is absolutely incorrect. The Electrical Equipment Division of the Standards Committee feels that it has been called upon by the motor car manufacturers to state the proper standard, as we see it, towards which the industry is trending. For two years, I speak not from my own recollection but from the records of the Society, this question has been discussed pro and con and at previous meetings the matter has been brought before you for action. In the meantime car makers are going ahead with plans and designs, and have very decided views on the subject. It is peculiar, possibly, that the majority of this Division, until more or less recently, favored the two-wire system. I can say that positively for myself. After considering the question very seriously, after veritably sweating blood over it, we have seen the wisdom of offering the one-wire system as recommended practice. We are desirous only of pointing the way as we see it in the industry; we are endeavoring to bring order out of chaos.

The Division is not satisfied with offering simply this brief recommendation. It believes this is but the starting point for much better electrical practice. We are endeavoring, by means of a very able sub-committee, to offer improved standards for all electrical fittings as applied to motor cars. At the present time few of us are satisfied with the fittings and believe that this is but the point of departure towards the goal for which we are striving.

H. L. TOWLE:—It seems to me that the important points in this discussion are two: In the first place, the principal objection to the single-wire system is the fact that it is impossible under practical conditions to test the single-wire system for grounds. If you have a two-wire system a ground can occur, and the system can be tested for grounds before a second ground on the other side of the circuit gives rise to trouble. But when you have a grounded return any ground is liable immediately to produce disastrous consequences. Consequently the owner has no way of safeguarding himself by periodic electrical tests.

Digitized by Google

The second point is that it would be very misleading for us to be governed by any analogy between low- and high-tension conditions. It is extremely easy to say that because we have only 6 or 12 volts it is an easy thing to insulate. So it is; but we have stiff, heavy conductors, heavy cables and so on, and the problem is not to confine the current, it is to achieve a mechanical condition in the insulation which will resist the effects of vibration, chafing and strain at the points of support.

I happen to know what the principal difficulty of a prominent maker of electric lighting and starting equipment is with the rather careless attention given to mechanical installation by the automobile manufacturers after the equipment gets into their hands. They provide slovenly battery connections, the cables are carried in some haphazard way, and so on, which does not give the electrical equipment a fair chance to show what it can do. Consequently, in dealing with this subject constructors ought to regard it as primarily a mechanical, not an electrical, problem.

F. E. Moskovics:—Broadly, the art is too unsettled to determine definitely that one system or the other holds superiority sufficient to justify it being adopted as a standard of practice. I think that Mr. Conant's expression that the idea of the committee was to represent a trend of development makes my point clear. Is it the sense of the Society that what represents a trend of development should be adopted as a standard? A trend of development before it has been sufficiently well worked out, sufficiently well practiced and gained a broad enough use to make it a standard, is not yet a standard. I do not know any phase of an automobile that shows itself so shifting, so changing, as the electric lighting and starting equipment. I know concerns that over-night change the entire equipment practically, and go to something that they did not think of before. My contention is that the art is in too chaotic a stage, that we are not settled enough to confine or restrict the limits of development by recognizing a standard practice at this time. Let the art develop. If we agree that the next year is going to bring marked progress in the art, then we will know more in a year from now; and if we adopt a standard and go ahead with that and say that is our idea of finality, we will surely lose dignity and prestigé if our premises are proven faulty. I would argue just as strongly against the adoption of a two-wire system at this time.

W. H. Conant:—The argument just presented would have successfully prevented the Society from establishing any standard whatever or making any advance in the matter of recommended practice. I claim that the argument that if we cannot achieve perfection today we must make no advance toward it, is fallacious. This principle of "recommended practice" has been ably defined by Mr. Souther as a matter of day to day and year to year advance. We are striving to perfect the art. If we had made no strides in the matter of standards each year the Society would have failed in its functions. But because we have taken one step at a time that appeared to be forward, the Society today has achieved a great record.

Mr. Riker is an electrical engineer first. He built electric cars years

Digitized by Google

ago. He is a strong believer in all that is perfection in electric devices and equipment. He has until more or less recently opposed strongly the two-wire system. He is a motor car manufacturer today with a foundation of electrical training. He is firmly convinced that the Division is right and it was only through his enlightened discussion of the matter that the Division came to its conclusion. He believes now in the single-wire system. The Division has nothing to defend in the matter—nothing to support. It is merely trying to serve the Society as we understand you desire. If we still defer this question, it is problematical whether we will ever arrive at a time when we can take any action.

R. McA. Lloyd:—I move the acceptance of the report. I wish to say that I think it is much easier to do this now than it will be a year hence. I am sorry that I cannot agree with Mr. Moskovics. The settlement of this question will become more and more difficult if deferred. There will be many more systems brought out and there will be less and less effort to get up this standard of equipment that we want. The principal thing that is necessary now is to have good systems and to do the installation work well. The probabilities are that they will be more satisfactory to the public if we agree on some sort of standard and concentrate on making the fittings to a practical uniformity. I am an electrical engineer and was originally in favor of the two-wire system. But in view of the discussion in the Standards Committee the other day, which I think was quite full, I am in favor of this action at the present time. I therefore move the adoption of the report.

(The motion was seconded.)

E. H. Ehrman:—Would it not be well to divide the report of the committee and vote on their two recommendations separately?

Chairman Wall:—That is proper, because the first part of the report has nothing to do with the second.

R. McA. Lloyd:—I move the acceptance of the recommendation as to the insulation.

(The motion was seconded, put to a vote and carried.)

R. McA. Lloyd:—I move the acceptance of the second part of the report.

Joseph Bijur:—It is useless to keep on opposing something that the majority wants, and there is nothing gained by saying the same thing to the same people, but that does not change the reason.

I think this: In the first place, everybody has an idea that the risk is just twice as great when you use a grounded return. I would like to point out that the arithmetic of that is all wrong. It would be more reasonable to say that the risk is fifty times as great. One purpose in wiring cars is that they should give good service, and another is that they should be safe. I am opposed at this time to adopting the recommendation of the single-wire system, because I think it will greatly increase the fire danger on cars. I think that if we go ahead and vote for a

Digitized by Google

standard of that character merely because a greater number of motor car builders like it (some like it because it is cheap, others because it is simple, and others because they think it is best), and at the same time increase the fire hazard of cars, the underwriters will step in and tell us to stop. So I will not be in favor of the single-wire system until I see that it is safe. I think that it can be made reasonably safe but that it is inherently more dangerous.

A car when it is turned out is usually faultless. After it has got into the repair shop the lamps will have been taken apart and the fittings taken out, and the fuses will have worked loose, as we have men working around the car. The single-wire system may be a good thing commercially, but all you have to do is short-circuit any part of the car, and if gasoline is present, there will be a fire. With a two-wire system you can do that twenty-nine times and it will be safe, because it is not grounded. With one equipment you do not get a flash at all unless the system is grounded. It is a question with the other whether you just happen to get a flash every shot, which is quite a different thing.

Now, the single-wire system is to me a thing that it is the privilege of certain car manufacturers to use who build exceedingly well; there are a few who are using the single-wire system and surrounding its use with protections that make it reasonable. But the vast majority of manufacturers would like to use the system for the simple reason that it requires less wire, and only for that reason; they are going to have trouble in the majority of cars.

The Electrical Equipment Division has seen that the single-wire system should be surrounded by certain precautions, and has started to recommend what those precautions should be, and there are a great many of them. But it seems to me that to say that we advocate the use of the single-wire system and at the same time say under what precautions we advocate it, is a mistake.

It is regrettable that Mr. Riker, who is a firm believer in the single-wire system, and Mr. Conrad, who has had a great deal of experience with it, are not here to present their side of the case. I cannot but feel—and I speak altogether from my personal standpoint—that it is unwise at this time to accept the recommendation of the Electrical Equipment Division, which has been approved by the Standards Committee.

(Councilor Baker assumed the chair.)

A. D. Libbey:—I believe that the Society should not vote for something which has admittedly weak points in it.

W. H. Conant:—In justice to the Division and the Standards Committee, I feel that it is in order to make the point of no quorum. I think there are not enough of us left here to decide this really important question.

W. G. Wall:—Mr. Chairman, I believe that we should recommend standards as we go along. I do not believe, however, that standards should be recommended unless a large majority of the Society are in favor of them. I think that the standards that we have recommended

Digitized by Google

have met with the hearty approval of a large majority of the members—which means a large majority of the manufacturers. This wiring subject has brought up considerable discussion, and there can be no doubt that there is great opposition to the single-wire system. Personally I am very much opposed to it. I hardly need give all the advantages or disadvantages of the single- and the two-wire systems. The single wire without question has a great many advantages. The low first cost is one of these. The double-wire system is, I think, without question safer; that is the principal reason I have been in favor of it. There is some trouble in making perfect grounds with the single-wire system. When you use a single-wire system there is no doubt that you have a large number of grounds to make, some of which are liable to be imperfect or become imperfect, due to rusting or corrosion. So it has always seemed to me that we would be safe if we should use a two-wire system.

In a case like this, where there is such a large number of members opposed to acceptance of a standard, its acceptance should at least be postponed for a while.

F. E. Moskovics:—Mr. Chairman, I believe that Mr. Conant brought out the point at issue. Mr. Wall also touched on it. It is not a matter whether a slight majority favor something that might be called a general trend, but whether there is a real demand from the Society. Before voting I want the members to consider seriously that they have heard several able engineers give some pretty good reasons in favor of the two-wire system.

H. G. Osburn:—Mr. Chairman, the demand for a three-light system on cheaper cars has been called to my attention. When only three lights are installed, better insulation is desirable. It is nearly as cheap in three-light installation to use the two-wire system. As the motor circuits are usually two wires, it only means the possible cost of the two runs that have to be made to the headlights, which are the principal runs, for the reason that the headlight regulation or dimming is more easily accomplished with two wires to the lamp with double-contact receptacle; therefore the increased cost of the two wires to the tail-light is somewhat compensated for in more simple methods of headlight regulation. I think in view of this it is just as well to delay final action and perhaps better meet this demand.

A. L. McMurtry:—Some of the members here seem to forget that it is simply recommended for practice, not recommended as standard equipment.

I was on the committee last year. Out of the twenty-one letters we sent out asking about equipment, we received eleven replies favoring the one-wire system; four were non-committal and the rest two-wire. Two of the men who made the most strenuous objection to the single-wire system are building cars today fitted with it.

When you consider the number of cars being turned out today fitted with the one-wire system, and the number of cars that will be turned

Digitized by Google

out in 1915 with it, I think it is up to the Society to recommend as practice the one-wire system, because I firmly believe that the one-wire cars will be in the majority, and as soon as the system is recommended as practice, the lamp makers will make up the single-contact-base lamp in the same quantity as they now do the double. I have heard a lot of objections to the one-wire system, mainly about fire and so on. I would like to ask why such large concerns as the General Electric Company wire their gasoline-motor-driven railway cars, carrying voltages up to 800, with a one-wire system, if it is so dangerous, and if it is just a matter of cost; and if there is all this trouble about the one-wire system, why do they not burn up more trolley cars?

F. E. Moskovics:—The answer is very obvious. The systems that Mr. McMurtry mentions are handled by experts and taken care of minutely in shops, cleaned and washed, and get the very best attention. I think Mr. McMurtry's own car does not receive as careful attention. I know mine does not.

W. H. Conant:—I thought that my point of no quorum might bring this matter to an issue. Some of the very best arguments have been overlooked entirely. I do not feel it fair to argue this question at this hour of the day and if, Mr. Chairman, you contemplate a vote on the motion, I would press my point of no quorum, because the question has not been presented fully and cannot be presented fairly, at this hour.

R. McA. Lloyd:—This question was scheduled for this afternoon. If anybody wanted to vote on it he could come. I think we should have this vote. Mr. Bijur said the only advantage in the single-wire system is that we save a little wire. I think that is a distinct argument in its favor. If anybody has had any experience with the wiring of cars, he wishes he could save half of it. There are a lot of things that get more and more complicated with two wires, and it is natural that we shall make the one-wire system better.

David Fergusson:—Our company used the double-wire system until two years ago. We frequently had trouble. We wired in the best manner possible. We called the electricians in to make an investigation and found that the two-pole bulbs and fittings were absolutely inadequate in regard to insulation for the purpose. We felt we could not go to work and re-design those bulbs. We had to use standard bulbs. We called the electricians in again and they advised the single-wire system, and we adopted it as a standard. I think many other companies have done so. We have had it in use two years on somewhere in the neighborhood of five thousand cars. Some of them must have run nearly a hundred thousand miles by this time, and I have not yet heard of a single accident from a car catching fire from anything going wrong with the wiring. The bulbs and fittings are altogether superior to the two-wire bulb sockets, &c. We believe the single-wire system is altogether preferable.

F. E. Moskovics:—The company I represent are using the one-wire system. I will not argue on the matter of economy. I am urging that

Digitized by Google

where there is so much difference of opinion, we ought to postpone action.

CHAIRMAN BAKER:—It seems that we have discussed this matter quite thoroughly.

W. H. CONANT:—I press again my point of no quorum. The Constitution says that fifty voting members must be present.

CHAIRMAN BAKER:—According to the Constitution there must be fifty voting members present to constitute a quorum. There are not fifty voting members present at this time.

(Vice-President Zimmerschied assumed the chair."

DISCUSSION OF MOTOR TESTING DIVISION REPORT*

HERBERT CHASE:—The Motor Testing Division has prepared three forms for use in making commercial tests. The forms are reproduced in the folder which has been distributed, and cover practically all the points that we think need be covered in the average commercial test.

I think, Mr. Chairman, that this report is in shape to present for acceptance at this meeting. I move that it be accepted.

(The motion was seconded.)

CHAIRMAN ZIMMERSCHIED:—Is there any discussion? The committee has spent a great deal of time and work on this question and has prepared what we think are excellent forms for commercial motor testing, in that they go just enough into what we might call the research field to make thoroughly intelligible and comparable the test figures and data obtained at different plants.

(The motion was put to a vote and carried.)

(Vice-President Wall assumed the chair.)

DISCUSSION OF PLEASURE CAR WHEELS DIVISION REPORT†

RIM TESTS

HENRY SOUTHER:—The gist of the first paragraph of the report is that the user, the manufacturer, is not interested when the rim bursts or fails entirely, but when it deflects seriously enough to prevent the proper carrying of the tire. The tire makers are naturally very much interested in the shape of the rim while it is at the usual pressure, not at bursting pressure.

*For text of the report, see page 36.
†For text of the report, see page 25.

Digitized by Google

The idea is to put on a predetermined load, so that all the take-up or lost-motion will be taken up before the test begins. The deflections given in the table are the results of a great many tests, which are graphically illustrated in the report. The straight line of crosses in these plotted curves and charts represents the standard deflection and set permitted under these specifications. The other curves show the actual results of tests. It will be noted that the smaller sizes of rims, 32 by 3½, 34 by 4, were all safely within the desired standard, and that all the exceptions are in the 36 by 4½ size. This corresponds with experience. There has never been any trouble with the smaller-sized rim, but there has been some trouble with the same makes of the larger-sized rim.

No names have been given in plotting these curves, for very obvious reasons, and no attempt will be made to suggest the enforcement of these specifications until January 1 of next year, in order that the manufacturers may prepare better material or better treatment or strengthening of another kind by that time.

DEMOUNTABLE RIM STANDARDIZATION

The original intention of the committee was to standardize some form of rim. It seems impossible at this moment to do that, there being three forms, certainly two, which are bound to exist for a time, at least, and the standardization will be performed by experience and the survival of the fittest. The matter of standardized demountable rims and fixtures is not ready for a report. There are a great many differences that must be reconciled and a great deal of light must be let in upon the subject before we shall be ready. We will make some attempt to do that by one or more papers at this meeting, setting forth the opinions and difficulties that the committee faces.

TIRE SIZES

The next subject which the committee undertook to simplify was the number of tire sizes in use. A list of eight sizes of tires is given in the report, these eight sizes covering 85 per cent. of the demand. Fifteen per cent. are outside of the eight, and in this 15 per cent, are the oversize tires, such as 37 by 5, to be used on the 36 by 4½ rims.

The idea of the committee on all those outside is this: manufacturers specify one of the eight sizes, and possibly there would be one or two more—nine or ten sizes, as standard equipment, and that they shall be furnished at about regular prices. In other words, they shall be the standard tires. Now, then, if the purchaser wants an oversize tire he can get it—there are only four or five of them—but he would pay a little more money for it. This would tend to concentrate all on the standard sizes.

The report of the committee is not complete except as to the table of inspection for rims. That seems to be complete, but at the same time I want to say this, as chairman of the Standards Committee: that the report is not final when it gets to this stage; everything recommended by the Divisions and by the Standards Committee as a whole should be fully

Digitized by Google

discussed at a meeting of this character. There are a large number who cannot and who do not attend committee meetings and they must say their say here or else take the consequences, so to speak. That will come up in connection with several other reports. We want the fullest discussion at this open meeting, where everybody is supposed to come, and we want it right now in connection with this report. Any suggestions or help or new business offered will be very gratefully welcomed.

CHAIRMAN WALL:—Gentlemen, you have heard Mr. Souther's report. I know of no report which proves to us the advantages of standardization any better than this does, and I believe that the average layman will comprehend the advantages of some of our other standards work. We wish discussion of all of these reports, especially one of this kind. The report is now open for discussion.

ORREL A. PARKER:—I think that the report is splendid, and believe that its adoption might be helped if the fact were pointed out that in addition to the economy to the manufacturer and dealer, there is an economy to the actual user of tires through the selection of what might be called well-balanced tires; that is, tires of a sufficient cross-section but not too large a diameter. It has been my experience in examining tire troubles or solving them that the well-balanced tires seldom cause trouble, but tires that are very large in diameter for their cross-section or very large in cross-section for the width of rim, not only cause trouble in the construction of the tires themselves but in the fit of the tires on the rim. I know of a conspicuous trouble with the 32 by 3 straight-side, where the wire base was not the right size to fit the rim. That was some two years ago, and it has been remedied. Difficulties have been had also with 37 by 4½ oversize on 36 by 4 rims, the 4-inch rim being about ⅜ of an inch narrower than the 4½-inch rim that should be used. The economy to the user as well as to the manufacturer should make the speedy adoption of this report practicable.

DAVID FERGUSSON:—I certainly would advocate the use of the 37″ by 5″ tire. A very large number of makers are using that size as a standard and it is a very suitable proportion. There certainly must be a 5-inch tire for heavy cars. For 48-horsepower six-cylinder cars, weighing close to 5,000 pounds, there is nothing in this proposed list between 36 by 4½ and 38 by 5½, which is certainly a big mistake. Although there is a move to standardize another size here, 36″ by 5″, I do not see the use of doing this, when we have another that is already a well-recognized standard, viz., 37 by 5, used on thousands of cars at the present time.

E. R. HALL:—Answering Mr. Fergusson's objection, the Division has suggested a tire standard comprising tires of even tread diameters only. Tire manufacturers will doubtless make oversize tires for the majority of these tire sizes.

The 36 by 5 tire now in use is applied to a rim of the 4½-inch section, although called a 5-inch rim. A 37 by 5 tire will naturally be manufactured to oversize 36 by 4½″ equipment, giving a tire of slightly greater capacity than the present 36 by 5. Any 5-inch tire on a rim of 4½-inch

Digitized by Google

section gives an oversize condition of a tire too large for the rim, which, although generally proper for consumers, is not a proper equipment for automobile manufacturers. A manufacturer should never turn out a car with tires which cannot be properly oversized. If the car is initially equipped with present 5-inch tires, which always go on rims of the 4½-inch section, the consumer has no opportunity to properly oversize, as the only size available for oversize is the 5½-inch size tire on a 4½-inch section rim, which is very undesirable.

The matter of standardizing a new 5-inch tire, probably in 36″ by 5″ size, to fit a new 5-inch rim of larger contour than the present 4½-inch, which rim will properly take a 5½-inch tire as oversize, is now under advisement by the Clincher Automobile Tire Manufacturers' Association, and as soon as there is anything definitely decided the matter will be taken up with the Pleasure Car Wheels Division of the S. A. E.

HENRY HESS:—I would like to add my experience as a user to Mr. Fergusson's statement. I have driven a pretty heavy car with 37″ by 5″ tires for five months over all sorts of roads, and at the end of that time still had original air in one or two; had not even pumped them up again. I think this is not exceptional, because I have had out of nearly every tire that I have had on the car an excess of 5,000 miles, and in some cases I have had nearly 10,000 miles. I therefore say that the size of 37 by 5 which Mr. Fergusson advocates is an exceedingly useful one, as proven by experience, on a car of that weight.

B. B. BACHMAN:—As I recollect the discussion in the Standards Committee meeting, the idea was that the eight sizes listed were to be the proposed standard of even dimensions, but that that did not mean that there would not be oversize tires of possibly four or five different sizes acting as a reinforcement of this proposed standard. I understood, too, Mr. Hall's remarks at that time, as this morning, that there are in contemplation five or six additional oversizes. I think 37 by 5 should be included, because that, with several others, was to be in addition to this. These I understood were to be the standard tires to be proposed, not including the oversizes.

HENRY HESS:—The resolution, while permitting the oversize tires, because of their utility, would result in a cash penalization of their users; that would be just only for freak sizes, or sizes not warranted for standard cars turned out by important car builders.

HENRY SOUTHER:—I am afraid that there would be that penalization. If a man is driving a heavy car, he has to have a heavy tire. As near as I can find from the tire manufacturers, everybody has to pay for them.

HENRY HESS:—But the report states that they pay extra for them.

HENRY SOUTHER:—Well, call it extra, if you like; more than the regular.

G. L. MARKLAND, JR.:—Would it not be well to consider the car entirely in this case? If a car built for maximum service is used for maximum service, put a heavy tire on. Mr. Hess states that he gets good results. Do not have two sizes on your car, though; put one size on and

Digitized by Google

keep it there. That is the idea of the Standards Committee making a standard for certain cars.

HENRY SOUTHER:—I think there is a very good reason for that: that is, if you make the 37 a standard somebody will come along with a 38 by 5½. In other words, a certain group of drivers always ask for a little bigger tire than the car manufacturer handed out as standard. Therefore if the car manufacturer hands out 37 by 5, the user is going to ask for 38 by 5½ or something else. That is the exception, however. As a rule the buyer takes what the manufacturer gives him.

DAVID FERGUSSON:—There is another feature in regard to these tire sizes, and that is that 36″ by 4½″, 37″ by 5″ and 38″ by 5½″ all have the same seat diameter for the tire. So if a man wanted a bigger tire than 37 by 5 he would press his rim off and put the size larger tire on that same wheel, whereas a 36″ by 5″ requires a new diameter of wheel, introducing another diameter of wood felloe. Our company has made a good many thousand cars with 37″ by 5″ tires. We know that is a good size for the 48-horsepower car. But we have no knowledge of the 36″ by 5″ tire; it may or may not be satisfactory for that weight car. The proposed 36″ by 5″ rim will take an oversize tire 37″ by 5½″. But that would be too big a tire for the front wheels. We would not get enough clearance between the tire and side steering rod. It is always an advantage to have a small cross-section tire for the front wheels to get good steering and also a better steering lock for turning in a small circle.

The 36 by 5 gives us one more diameter of felloe band. This is quite important in the manufacture of demountable rims. The 36 by 4, 37 by 5 and 38 by 5½ have now all one diameter of felloe band. We are making three sizes of car at our plant, 38, 48 and 66 horsepower. We can put any one of the following sizes of tires on any of the wheels for these, 36 by 4, 37 by 5 and 38 by 5½. That should be taken into account when we think about a new 5-inch section tire.

E. R. HALL:—In reference to the 36 by 5 tire not being tried out, there has always been a large number of 36 by 5 tires in use. They all fit a 36 by 5 rim, which, however, is the same in section as the 4½-inch rim. The tire has worked out very satisfactorily indeed, but the 37″ by 5½″, which is its oversize, is not a satisfactory tire on the rim. A new 36 by 5 tire to fit a new 5-inch rim of proper width will be a better tire in every way than the present 36 by 5 tire on the narrower rim which it is made to fit, and also better than the present 37 by 5 tire which is the oversize for the 36 by 4½. This new 36 by 5 tire and rim would also allow for satisfactory oversizing.

In the list of standard tire sizes which the Division recommends we show eight different sizes of rim. The addition of a new type of 36 by 5 tire would add one more rim to this list. This additional size, although adding to the difficulties of the tire, rim, and wheel manufacturers, will give us a tire and rim combination so much better than we have at present that all concerned may agree that its advantages will more than offset its disadvantages.

Digitized by Google

L. S. Bowers:—Mr. Chairman, it seems to me that it is hardly a fair proposition for the Standards Committee or this meeting to consider the option which the user may have, since I think the major purpose in establishing tire sizes is to make them permanently standard. Induce the manufacturers to apply those sizes to tires for certain determined loads, and as a natural consequence the users will continue in the use of those tires. So, it seems to me that it is the purpose of the committee to determine for general weight, general loads, the most practical sizes of tires and to recommend that they be the standard sizes. This being the recommendation, of course the manufacturers will not depart from these sizes and then as a natural consequence, that standardization is eventually going to educate the users and buyers of tires so that they will continue to use those sizes.

Now, if this committee in its regard for the requirements, determine that the 36 by 5 or the 37 by 5 tire is the tire for certain loads, that should be adopted as a standard, without a consideration of the possibility of other sized tires which are to be used in the option of the buyer of the car only. I think we ought not to consider the allowance of options for the ultimate user of the car in our standardization work. Otherwise, we lose much of the merit of our work. If we cannot effect standards which will become absolute standards, subject, of course, to changes which experience may dictate, a large part of our effort fails. So, as I take it, the committee should consider these various suggestions for sizes of tires best adapted for certain character of load, and if it is decided that the 37 by 5 is the best sized tire for the load, let us make that our standard.

Chairman Wall:—We do not expect that everyone is going to adopt these standards immediately. At the same time we always want to get our standards as near right as possible, so that they will be used at least by the majority of the members. The oversized tire is at times of great advantage to the manufacturers, and at other times is a big nuisance.

Is there any further discussion?

G. L. Markland, Jr:—Why do we have standards with exceptions? The work of the Standards Committee is a pretty hard job. I do not know whether the rest of us have considered all the possible features and details they are capable of devising, but it seems to me a standard should be a standard, and of course to have exceptions means there is no standard.

Henry Souther:—We are very glad indeed to get the suggestions that are made here. It is not a very serious thing for the committee to add three or four sizes, as suggested by this discussion.

There is only one more item that I want to point out and that is the unfortunate use of very large oversize tires on narrow rims. To make that perfectly clear to those who have not been fortunate enough to hear the discussion, it is like putting a great big soap bubble on a pipe. It tends to wobble and does. Therefore it rolls against the side

Digitized by Google

of the rims, a rim of any form that may be used, and permits cutting and undue flexing of the fabric along the line of the bead or in that neighborhood. That is the unfortunate part of it and that is the reason that the Clincher Tire Association committee is looking seriously towards a new section of rim. The sections we have before us, I think four or five, have been in use for many years. The oversized tire on a narrow rim is very unfortunate; for the manufacturers, because it brings a good deal of complaint; for the user, because it brings a great deal of trouble.

This list of eight tire sizes will probably grow two or three before you next see it. What we are asking for today is acceptance by the Society of proposed methods of inspection of rims, which seem to be thoroughly good. That is the only part of the report that requires definite action, Mr. Chairman. The rest of it is report of progress.

CHAIRMAN WALL:—Gentlemen, you have heard what Mr. Souther has said in regard to this. What is your pleasure?

ORREL A. PARKER:—I move the adoption of the report.

(The motion was seconded, put to a vote and carried.)

HENRY HESS:—I would like to move that the committee be instructed to take into serious consideration in addition to the standard sizes, the 37 by 5 size.

CHAIRMAN WALL:—I think, Mr. Hess, that the committee will probably do that anyway without any formal motion.

S. M. M. T. STANDARD RIMS

A CRITICISM

BY E. R. HALL

(Member of the Society)

Ever since the clincher type automobile rim has become popular in Great Britain and Europe a very chaotic condition has existed in millimeter rim design. Each manufacturer of millimeter rims had his own so-called standard design to which he worked and the result was that rims marked the same size and supposed to take the same tire differed widely in design. The tolerances which the rim manufacturers allowed themselves were so gross that there was oftentimes considerable variation between two rims of the same size and manufactured by the same manufacturer. This condition prevailed in spite of the fact that it is ruinous to a beaded edge or clincher type tire, such as is in general use abroad, to be used on a rim which it does not fit exactly. A great hardship was thereby worked upon the tire manufacturers who had to make the bead of their tire small enough to slide into the smallest rim of its

Digitized by Google

rated size on the market, and to trust to luck for satisfaction in their product when used on the larger rims of its rated size.

The Society of Motor Manufacturers and Traders of Great Britain in June, 1913, standardized the millimeter clincher rim and later, in September, 1913, adopted a set of permissible tolerances to which the rim manufacturer should work. The society has produced a most complete set of rim checking templates, tapes and printed specifications covering their standard.

As far as we are able to determine, this standard, known as the S. M. M. T. standard, has been universally adopted abroad.

Although a very great step in the right direction and possibly the best that could be made at this time, the S. M. M. T. standard is open to criticism from the American viewpoint.

The S. M. M. T. standard is given below.

It will be noted that the two chief dimensions of the rim section are the width between clinches marked *A* and the depth of clinch marked *V* and that the majority of the other section dimensions can be expressed in terms of these two. As a matter of convenience and record this feature is admirable. The width of the rim, dimension *A*, was apparently chosen arbitrarily, as it does not increase in increments corresponding to the increase in rated rim size. Between any two of the first six sections the increase in rated size of rim and tire section is exactly 15 millimeters, while the corresponding increase in width, dimension *A*, is respectively as follows: 13.0, 11.0, 5.0, 9.5 and 13.5 millimeters.

TABLE I

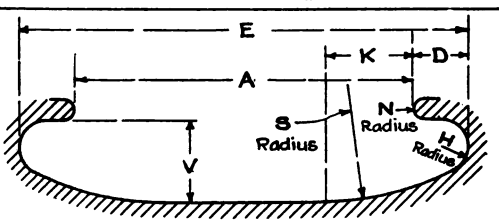

SIZE	WIDTH A	DEPTH V	EXTREME WIDTH, E A+1.4V	LENGTH OF HEEL, D .7 V	RADIUS OF HEEL, R .326 V	LENGTH OF SOLE, K 1.05V	RADIUS OF SOLE S	RADIUS OF ANCHORAGE N
65(or 75)	38.5	10	52.5	7.0	3.26	10.9	35.79	1.75
90	51.5	12	68.3	8.4	3.91	13.06	42.92	2.0
105	62.5	14	82.1	9.8	4.56	15.26	50.05	2.0
120	67.5	16	89.9	11.2	5.22	17.44	57.32	2.25
135	77.0	17	100.8	11.9	5.54	18.53	60.82	2.5
150	90.5	18	115.7	12.6	5.86	19.62	64.42	2.5
175	90.5	18	115.7	12.6	5.86	19.62	64.42	2.5

NOTE:-All Dimensions are in Millimeters

Digitized by Google

The increase in rated size between the 150- and 175-millimeter rim is 25 millimeters, while there is no increase in width, dimension *A*. We would have preferred to have this increase in *A* a constant quantity, possibly 10 millimeters, between any two consecutive sizes from 75 milli-

TABLE II				
RATED RIM SIZE	TIRE SEAT CIRCUMFERENCE		TIRE SEAT DIAMETER	
	MILLIM'RS	INCHES	MILLIM'RS	INCHES
650 x 65	1600	62.992	509.3	20.051
700 x 65	1740	68.504	553.86	21.805
750 x 65	1870	73.622	595.24	23.435
710 x 90	1620	63.780	515.66	20.301
760 x 90	1760	69.291	560.22	22.056
810 x 90	1930	75.984	614.34	24.186
870 x 90	2125	83.661	676.41	26.630
910 x 90	2250	88.583	716.20	28.197
1010 x 90	2575	101.378	819.65	32.269
765 x 105	1755	69.094	558.63	21.993
815 x 105	1924	75.748	612.43	24.111
875 x 105	2119	83.425	674.50	26.555
915 x 105	2244	88.346	714.29	28.122
820 x 120	1780	70.079	566.59	22.307
850 x 120	1880	74.016	598.42	23.560
880 x 120	1980	77.953	630.25	24.813
920 x 120	2100	82.677	668.45	26.317
895 x 135	1855	73.031	590.46	23.247
935 x 135	2011	79.173	640.12	25.202
900 x 150	1904	74.960	606.06	23.861
1000 x 150	2215	87.205	705.06	27.758
915 x 175	1581	62.244	503.25	19.813
965 x 175	1800	70.866	572.96	22.557

Digitized by Google

meters to 150 millimeters, inclusive, and the increase between the 150 millimeters and 175 millimeters sizes be zero as at present. This would certainly give a more uniform and logical step-up in tire sectional sizes, provided the tires were made any where near rated size.

Dimension *V* or depth of clinch increases by very small increments as the rim size increases, not more than 2 millimeters in any case. As these differences are so small, and in view of the fact that the tolerances prescribed permit them to entirely disappear and in some cases overlap (as will be noted below), we would prefer to see dimension *V* equal 13 millimeters for both 90- and 105-millimeter rims and 16 millimeters for 120- and 135-millimeter rims. This would give only four different inside rim contours instead of six as at present prescribed, making it necessary for the rim manufacturer to have only four sets of contour rolls instead of six, thus cutting down the forming roll equipment 33 per cent. (Difference in width between any two rims of the same contour can be taken care of where necessary by using blank spacer rolls in rolling.) Under these conditions the rims should fit the tires exactly as satisfactorily as in the case of the present standard. With the changes as above outlined the table of standard dimensions of the rim sections would appear as shown in Table III.

Referring to the diameter and circumference table, Table II, as standardized there appears to be but very little difference (approximately 6 millimeters) between the 90- and 105-millimeter circumferences, comparing the 810 x 90 and the 815 x 105, the 870 x 90 and the 875 x 105, etc. It appears practicable to make these corresponding 90- and 105-millimeter rims of the same circumference, thus permitting over-size tire equipment with the regular standards size tires, enabling the use of an

TABLE III

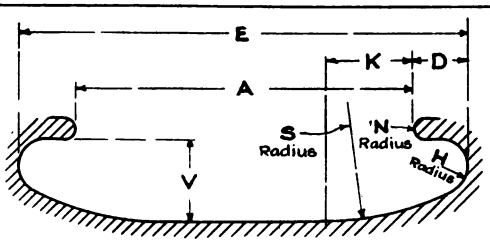

SIZE	WIDTH A	DEPTH V	EXTREME WIDTH, E A+1.4V	LENGTH OF HEEL, D .7V	RADIUS OF HEEL, H .326V	LENGTH OF SOLE, K 1.09V	RADIUS OF SOLE S	RADIUS OF ANCHORAGE N
65 & 75	38	10	52.0	7.0	3.26	10.9	35.79	1.75
90	48	13	66.2	9.1	4.24	14.17	46.56	2.0
105	58	13	76.2	9.1	4.24	14.17	46.56	2.0
120	68	16	90.4	11.2	5.22	17.44	57.32	2.5
135	78	16	100.4	11.2	5.22	17.44	57.32	2.5
150 & 175	88	18	113.2	12.6	5.87	19.62	64.46	2.5

NOTE:-All Dimensions are in Millimeters

Digitized by Google

815 x 105 standard tire on an 810 x 90 rim, etc.—a feature of untold value to car users. The differences in circumference are too great between the various other sectional sizes to allow of any further combination of this sort. We feel, however, that in the interest of reduction of the number of sizes the circumferences of the 900 x 150 and the 915 x 175 should be the same and the 1,000 x 150 and 965 x 175 should be the same, even though the nominal sizes are very diversified, thus giving only two rims to take care of these four tire sizes.

It will be noted that these circumferences do not follow any law or direct relation to the tire section, as is the case with the American standard. As an example of American practice, take a 34 x 4 tire. The tire seat circumference of the rim is 81.682 inches, giving a diameter of 26 inches. This is equal to the nominal tire diameter (34 inches) minus twice the nominal tire section diameter (4 inches).

$$\frac{81.682}{3.1416} = 26 = 34 - (2 \times 4)$$

The S. M. M. T standard could be very much improved if it were possible to lay it out to some such law.

The above criticisms and suggestions are entirely from the American viewpoint. We must admit that the S. M. M. T. standard as it stands is a very great improvement over former conditions, and is probably the very best that could be attained under the circumstances. Credit is due the Society of Motor Manufacturers and Traders for causing the adoption of an admirable rim section contour comprising excellent proportions, bearing the same relation to each other in all sizes. In this particular their standard is certainly better than the American standard.

It is improbable that any of the improvements to the S. M. M. T. standard suggested above could be incorporated at this time. For this reason we favor its universal adoption in its present form, excepting tolerances (which see below).

The tolerances specified by the S. M. M. T. standard are so great that they almost entirely defeat its purpose from the American standpoint. Accustomed to rims manufactured with a very high degree of precision and to very close tolerances, the American tire manufacturer designs his tire to give an ideal fit on a rim exact to standard and he is sure the tire will fit practically as perfectly in a maximum or minimum rim of its size. If a tire is made to fit a correct S. M. M. T. standard rim as perfectly, the tire cannot be made to enter a minimum rim and will float around and be a very poor fit in a maximum rim.

The S. M. M. T. standard tolerances are shown in Table IV.

Combining Table I and IV we can compile Table V, giving maximum and minimum section dimensions.

This table shows an overlapping of sizes in a number of cases. For example, for a 120-millimeter rim V maximum equals 17 millimeters and D maximum equals 11.7 millimeters, while for a 135-millimeter rim V minimum equals 15 millimeters and D minimum equals 11.4 milli-

Digitized by Google

TABLE IV

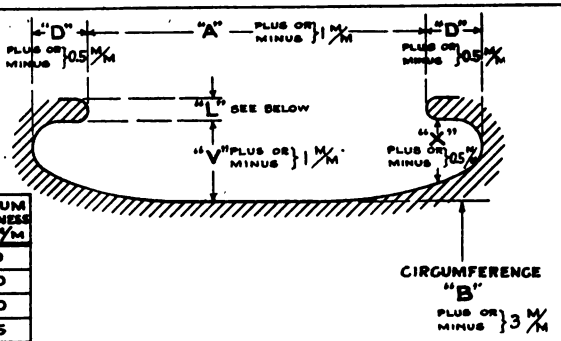

SIZE M/M	MINIMUM THICKNESS "L" M/M
65 (or 75)	3.0
90	3.0
105	3.0
120	3.5
135	4.0
150	5.0
175	5.0

meters. Yet in a properly designed 120-millimeter tire bead *V* is 1 millimeter less and *D* is 0.7 millimeter less than in the case of a 135-millimeter tire bead. In Table IV above the circumferential tolerance is 3 millimeters or a total tolerance of 6 millimeters. This large tolerance would cause a hardship in the use of inextensible bead tires similar to the majority of tires used in America in connection with quick detach-

TABLE V

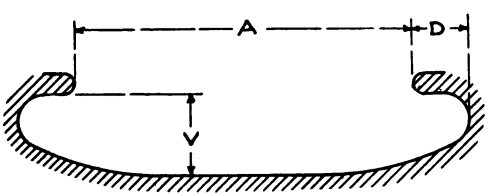

SIZE	A		V		D	
	MAXIMUM	MINIMUM	MAXIMUM	MINIMUM	MAXIMUM	MINIMUM
65 (or 75)	39.5	37.5	11	9	7.5	6.5
90	52.5	50.5	13	11	8.9	7.9
105	63.5	61.5	15	13	10.3	9.3
120	68.5	66.5	17	15	11.7	10.7
135	78.0	76.0	18	16	12.4	11.4
150	91.5	89.5	19	17	13.1	12.1
175	91.5	89.5	19	17	13.1	12.1

NOTE:-All Dimensions are in Millimeters

Digitized by Google

able type rims to the S. M. M. T. standards. On a maximum rim the tire would be extremely hard to apply and on a minimum rim it would fit very loosely, having a tendency to creep, making it always necessary to use flaps to keep the inner tube from being pinched between the tire bead and the rim.

Below is a table showing a comparison between S. M. M. T. and American standard rim tolerances given in both inches and millimeters.

TABLE VI

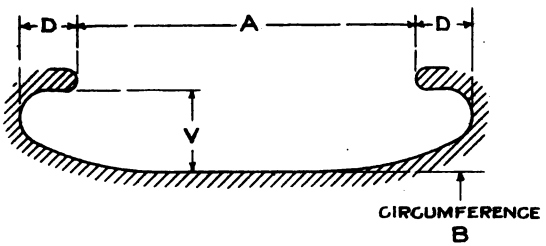

DIMENSION	S.M.M.T. STANDARD		AMERICAN STANDARD	
	MILLIMETERS	INCHES	MILLIMETERS	INCHES
A	±1.000	±0.039	±0.381	±0.015
B	±3.000	±0.118	±1.168	±0.046
D	±0.500	±0.020	±0.203	±0.008
V	±1.000	±0.039	+0.203 −0.000	+0.008 −0.000

As will readily be seen there is a marked difference, the American tolerances being very much closer and correspondingly more satisfactory.

American rim manufacturers find it no hardship to work to these American tolerances and there are no rims applied to cars in America to-day which are not rigidly inspected and passed within these tolerances. The closer tolerances permit of more accuracy in tire design and resulting better fit of the tire in the rim, which in turn results invariably in improved tire service—the ultimate goal in all rim standardization.

We see no reason why the American tolerances without change cannot immediately be adopted in connection with the S. M. M. T. standard and so make of it, to all concerned, a more real and much more valuable standard.

DISCUSSION

CHAIRMAN WALL:—I suppose that we would congratulate ourselves if we should ever get to the point where we will have a complete set of American standards. But an universal standard is what we will some

Digitized by Google

day want and what we should aim at, as it will be a great help to our manufacturers and especially to car users. I think the time will come when we will be as interested in having an universal standard as we are today in having an American standard.

C. C. CARLTON:—These matters of dimensions are very technical and likely to be somewhat uninteresting. Consequently I am afraid we are apt to overlook the importance of the points that have been made in Mr. Hall's paper. We have had the privilege of going over it very carefully and agree absolutely with everything that he has said, as I believe will all the tire companies and rim makers. I think that the matter in hand is very important. One foreign export manufacturer recently called on most of the foreign tire manufacturers and was assured that they had adopted the S. M. M. T. standard. So we now have the condition that all foreign car manufacturers and tire makers are using the same millimeter standard rim that we are using, with the exception that the tolerances laid down for use abroad cannot be accepted here.

STANDARDIZATION OF PNEUMATIC TIRE RIMS

BY E. R. HALL

(Member of the Society)

The Council of the Society of Automobile Engineers has established a sub-committee of the Standards Committee called the Pleasure Car Wheels Division, the function of which is to attempt the standardization of wheels for automobiles. As a part of this work the consideration of the different types of rims on the market for pneumatic tires is necessary, as they affect in a large degree the specifications for the wheel itself, and furthermore, broadly speaking, the rim as a part of the wheel.

A cursory perusal of rim manufacturers' literature will suffice to show the great necessity for standardization, and the great difficulties which will have to be surmounted. There are at least 44 different types of rims in very general and extensive use, requiring at least fourteen different sections of wood felloes, not to speak of the different bolt-holes, special wood cutting to allow for special fastening devices, etc. Besides these well-known and popular rims there are a great many rims more or less complicated in design, each claiming certain attractive features, which are not so well known. These conditions work a hardship on the wheel-maker, who in many cases has to carry wood of a size to take care of the largest section required and in making the smaller felloes has to waste a large amount of costly hickory.

An association called the Clincher Automobile Tire Manufacturers' Association, which has a membership consisting of the leading tire manufacturers, and an associate membership consisting of practically all the

Digitized by Google

rim manufacturers, was formed some years ago, and standardized the inside contours and tire seat diameters of all rims, but no attempt was made by it to standardize any special type of rim design. It passed any rim which met its tire-seating specifications, provided there was no feature in connection with the rim which could be injurious to the tire. Thus with no limitations whatsoever on fastening devices, etc., there has sprung up this very large number of different kinds of rims with which the market is now flooded.

There are six representative groups into which the various rims manufactured to-day can be classified, and the attempt will be made to pick out from each group one typical rim which will combine all the attractive and as few of the unattractive features of the rims of its group as possible. In the case of demountable rims we will simply attempt the selection of felloe bands, leaving the type of top rim optional.

The six representative groups are as follows:

I—One-Piece Clincher.

II—Quick Detachable Clincher.

III—Quick Detachable Straight-Side.

IV—Quick Detachable Universal.

V—Demountable.

VI—Demountable-Detachable.

The distinction between V and VI rests in the fact that there are a large number of demountable rims which have to be demounted before the tire can be removed from the rim, while there are others from which the tire can be removed while the rim still remains mounted on the wheel.

We will consider each group in the order above outlined.

I—THE ONE-PIECE CLINCHER RIM

This rim is made in one piece and is not cut in any direction; it will only receive regular clincher tires with soft extensible beads which can be pried over the edges of the rim. There is only one type of one-piece clincher rim on the market and the tire seat contour and diameter, as well as the thickness, have been standardized by the Clincher Automobile Tire Manufacturers' Association.

Although the design of this rim is illogical in some sizes, it has worked out very satisfactorily in practice, and it would be to my mind extremely bad practice and in fact practically impossible to make any change in the rim at this time. The rim has already been accepted by the Pleasure Car Wheels Division of the S. A. E. Standards Committee as a tentative standard.

The rim as standardized is shown in Fig. 1.

I recommend the adoption of this rim in its present form as standard.

QUICK DETACHABLE RIMS

In taking up the consideration of quick detachable rims, we have to face the fact that there are many designs of these rims on the market giving excellent satisfaction, and being made by different manufacturers, under their respective patents, and that they all have their very good points as

Digitized by Google

well as their bad points. It is a difficult matter to pick a rim arbitrarily and say it is the best. What I have here tried to do is to select the rim which appears to combine most of the good points and has as few of the bad points as possible.

II—THE QUICK DETACHABLE CLINCHER RIM

These rims, of which there are many types, are all designed to permit easier application of a regular clincher tire, and to take the popular quick detachable clincher tire as well. This latter tire has a bead of clincher shape, partially or wholly inextensible, and it is not possible to pry it over the side of a one-piece clincher rim. These rims are all composed of two or more parts, consisting first of a rim base with an integral inside clinch, or separate inside endless clincher ring, and a separate outside clincher ring which is made either open with some fastening device for holding the

FIGURE 1

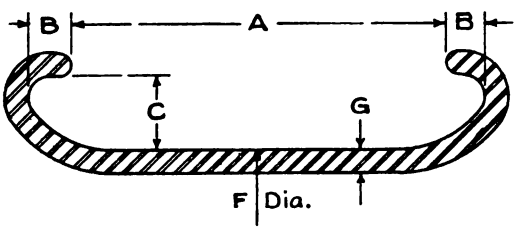

SIZE	A	B	C	G
3"	1.76	.255	.42	.126
3½"	2.05	.275	.48	.156
4"	2.42	.275	.48	.156
4½&5"	2.76	.390	.64	.172
5½&6"	3.50	.500	.78	.172

Dia. F = Nominal Tire Tread Diameter, minus twice nominal Tire Section Diameter.

Example:- 34"x4" Rim, Dia. F = 34-(2x4) = 26"

ends in place, or endless with an open lock ring to hold it in place. Examples of the most popular forms of quick detachable clincher rim are shown in section in Fig. 2.

Rim No. 1 is of the type which has a base, two endless clincher side-rings and an open-end lock ring which may be snapped out of its seat and so permit the removal of outside clincher ring and then tire. Rim No. 2 has the inside clinch integral with the rim base, the outside clincher ring and the lock ring being similar in action to those of rim No. 1, although different in design. Rims Nos. 3 and 4 are similar to rim

Digitized by Google

No. 2, except that the outside clincher ring is open-ended, having some mechanical lock for the ends of the ring. Rim No. 5 has an open-end outside clincher ring, but the angle of the groove in the rim base in which it seats is such that the inflation of the tire causes it to seat home more firmly, so that no locking device is necessary. The simplest, most inexpensive and lightest type appears to be a type similar to rim No. 5. Fig.

FIGURE 2

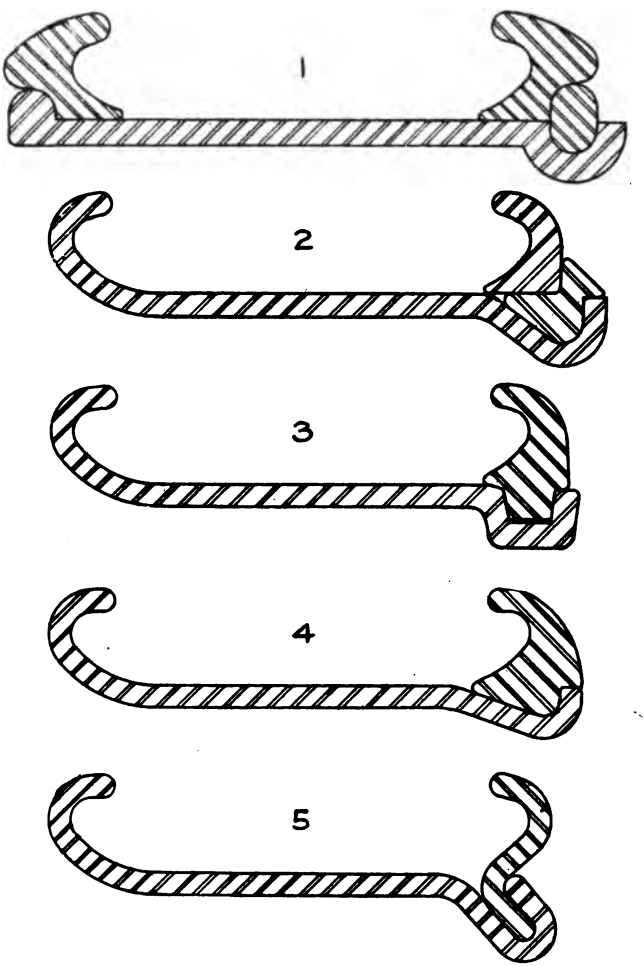

Digitized by Google

3 shows a rim of this type which I suggest as a possible standard for a quick detachable clincher rim.

Very few rims of this design have been made and used, but those which have been in use have given very good satisfaction. There are a number of unusual difficulties which have to be overcome in its manufacture, but they can all be overcome and a satisfactory rim turned out that will easily meet all requirements as to strength, set, etc. Unfortunately, rims of this design are a little difficult to operate. They cannot, for instance, be worked as easily as rims Nos. 1 and 2 (Fig. 2) as these latter rims have open rings of smaller and more flexible section, making them easier to remove and replace. I feel, however, that the advantages of simplicity, fewer parts, lightness, and the fact that no locking device is necessary, more than offset the disadvantage of the slightly more difficult operation.

III—THE QUICK DETACHABLE STRAIGHT-SIDE RIM

The straight-side rim is made to take any tire of the straight-side type. These tires all have inextensible beads and the only function of the rim is to hold the tire in place and support it. There is no hook to hold the tire down, this being taken care of by the inextensible bead of the tire itself. The quick detachable straight-side rims on the market are similar to the quick detachable clincher in their operation and in Fig. 4 are shown sections of the most popular types.

Rim No. 1 has two endless side-rings and an open locking rim. Rims Nos. 2 and 3 have inside flanges integral with the base, No. 2 having an

FIGURE 3

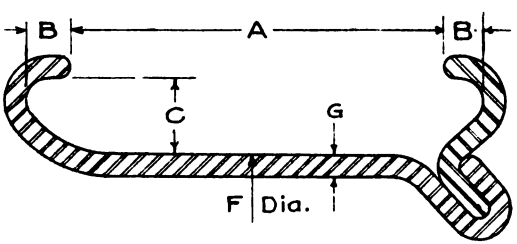

SIZE	A	B	C	G
3"	1.76	.255	.42	.126
3½"	2.05	.275	.48	.156
4"	2.42	.275	.48	.156
4½&5	2.76	.390	.64	.172
5½&6	3.50	.500	.78	.172

Dia. F = Nominal Tire Tread Diameter, minus twice nominal Tire Section Diameter.

Example:- 34"x4" Rim, Dia. F = 34-(2x4) = 26"

Digitized by Google

FIGURE 4

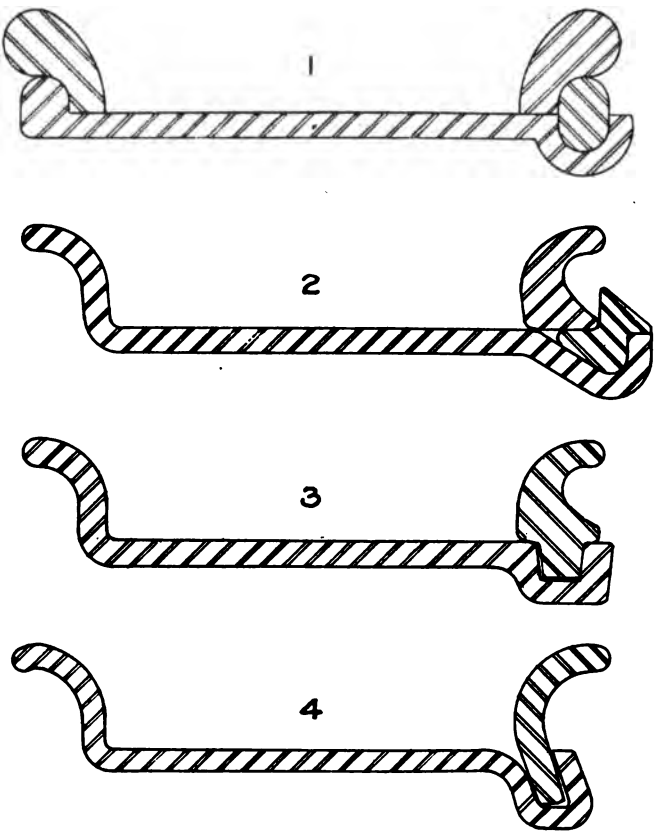

endless outside ring and an open locking ring, and No. 3 having an open outside ring with some locking device. Rim No. 4 is similar to No. 3, except that the groove in which the outside ring seats is at such an angle that the tire forces it into place and no locking device is necessary.

Considering the rims in Fig. 4, the simplest, lightest and most inexpensive appears to be a type similar to rim No. 4. Fig. 5 shows a rim of this type which I suggest as a possible standard for a quick detachable straight-side rim.

A number of rims of this type have been on the market and given excellent satisfaction. It is the easiest possible straight-side rim to operate and there are no unusual manufacturing difficulties connected with its

Digitized by Google

FIGURE 5

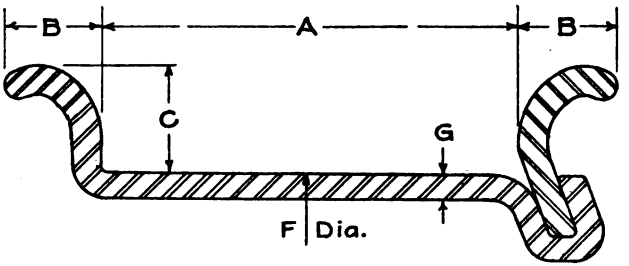

SIZE	A	B	C	G
3"	1.97	.553	.593	.125
3½"	2.31	.613	.687	.156
4"	2.69	.613	.687	.156
4½" & 5"	3.12	.683	.875	.172
5½" & 6"	3.83	.773	1.000	.172

Dia. F = Nominal Tire Tread Diameter, minus twice nominal Tire Section Diameter.

Example:- 34"x4" Rim, Dia. F = 34 - (2x4) = 26"

fabrication. When the proper material is used the rim is amply strong to meet all requirements as to strength, etc.

IV—UNIVERSAL QUICK DETACHABLE RIMS

The universal rim is made to take either the clincher or straight-side type of tire, all of these rims having reversible side rings which will take clincher tires when the hooks are turned in, and straight-side tires when the hooks are turned out. There are a number of different types of universal quick detachable rims. In Fig. 6 examples of the most common designs in use are shown.

Rims Nos. 1 and 2 are alike except for the slight difference in section of the open-end lock ring. Rim No. 3 has an open-end side ring held in place by a locking device, which works equally well with the side ring in position for either the clincher or straight-side tire.

A very great number of universal rims have been made and are in use, but the demand for them is rapidly decreasing, due to the fact that to-day both clincher and straight-side tires can be obtained with equal ease and at practically the same price, so that there is no longer any occasion for a person to change from the type of tire he prefers, as was formerly the case. In view of the fact that in all probability there will be very few universal rims made in the future, we do not feel justified in caus-

Digitized by Google

ing the expense necessary in the adoption of a standard and the elimination of other designs. I do, however, recommend that the bases of all universal quick detachable rims be made of the same thickness as the corresponding sizes in one-piece clincher rims, which will allow the use of the same wood felloe with all.

DEMOUNTABLE RIMS

The consideration of demountable rims with a view to standardizing is even more difficult than that of detachable rims and more necessary as well, as the types are more varied, the rim is growing more in popularity and the wood felloe and wheel sizes are more varied in dimensions. The expense and hardship consequent upon standardization would be very great on account of the many types; and the possibility of convincing argument and test to back up a standard very small, due to the very slight differences in operation of some of the rims, although they are materially different in design. Demountable rims all consist of a felloe band upon which can

FIGURE 6

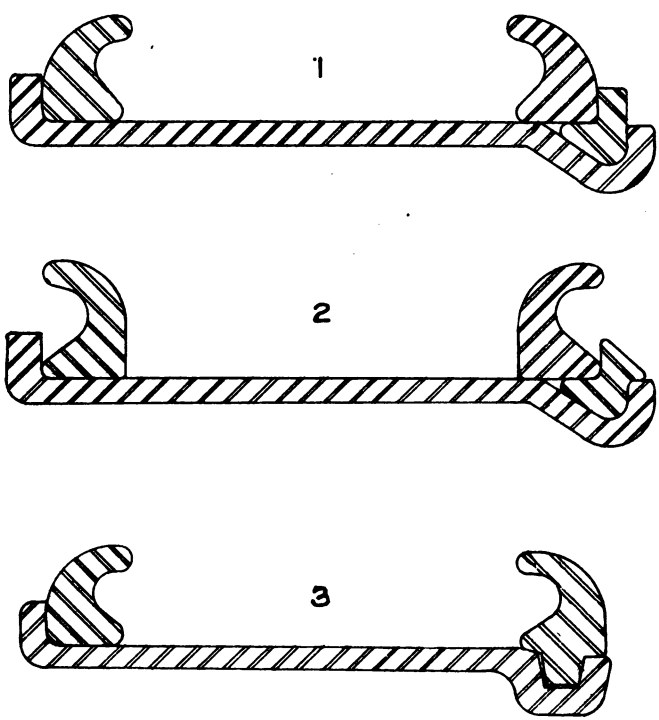

Digitized by Google

be mounted the tire-carrying rim, the rim being locked into place by a locking device. The rim can be a modification of any one of all the rims previously described in this paper, and also a large number of others, including the type which is transversely cut and which has to be demounted from the felloe band before the tire can be removed from the rim, a type of which there are a great number in use. The felloe bands are quite varied in design, but the most common are all made on the same principle—that of having the inside edge turned up at an angle upon which seats the rim

FIGURE 7

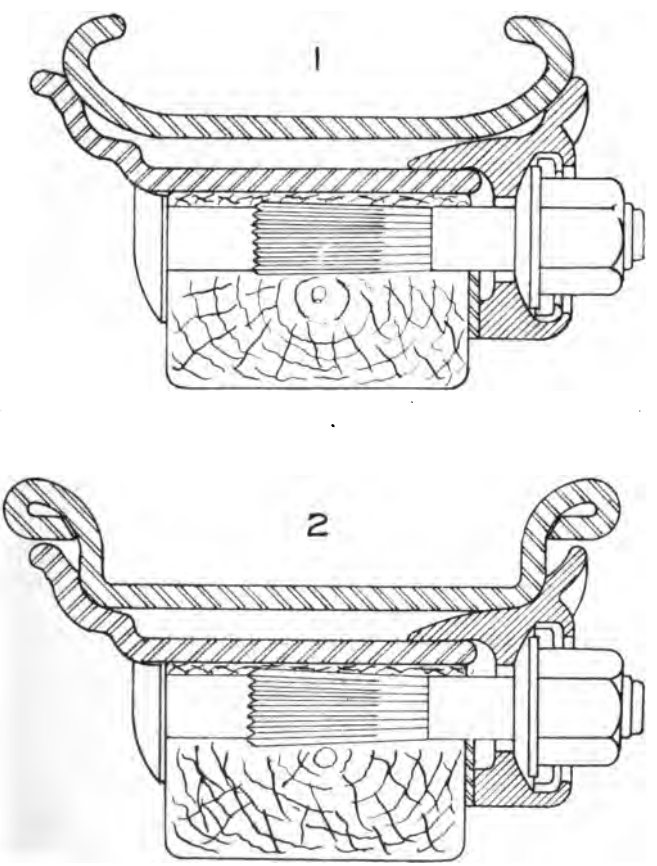

Digitized by Google

which is held in place by lugs; sometimes with but more often without a lock ring.

It appears quite impossible to attempt the standardization of the tire-carrying rim further than to suggest that the many types used which resemble the quick detachable rims previously described in this paper, be brought down to those few types which are suggested for standards.

The standardization of fastening devices also appears impossible at this time.

The standardization of felloe bands appears feasible, although it seems impossible at this time to standardize on one single type. It is necessary to consider two. I suggest that any special rim which cannot be adapted to one of these two felloe bands be so designed as to fit a felloe band which requires a wood wheel the same size as the bands suggested for standard.

The majority of demountable rims can be classified under two headings —the demountable rim which has to be demounted from the felloe band before the tire can be removed, and the demountable-detachable from which the tire can be removed without demounting the rim. The former are for most part cold-rolled to shape from flat strip steel and mounted on a cold-

FIGURE 8

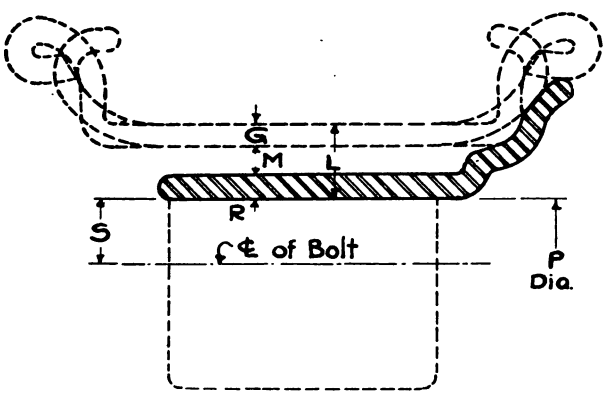

SIZE	G	M	R	L	S
3½"	.156	.187	.156	.500	.437
4"	.156	.187	.156	.500	.437
4½" & 5"	.172	.187	.156	.516	.437

Inside diameter of Felloe Band, P = Tire Seat diameter of Rim, minus 2×L

Example:- 34"x4" Felloe Band, P = 26-(2x.5) = 25"

Digitized by Google

rolled felloe band, which fits the rounded underside of the rim, leaving very little space between. The latter, demountable-detachable rims, are usually hot-rolled special shapes with ribs on the under side which engage a similar and opposed rib on a thick hot-rolled felloe band, leaving a somewhat larger space between.

V. THE DEMOUNTABLE RIM

In Fig. 7 are shown in section examples of two popular forms of demountable rims.

FIGURE 9.

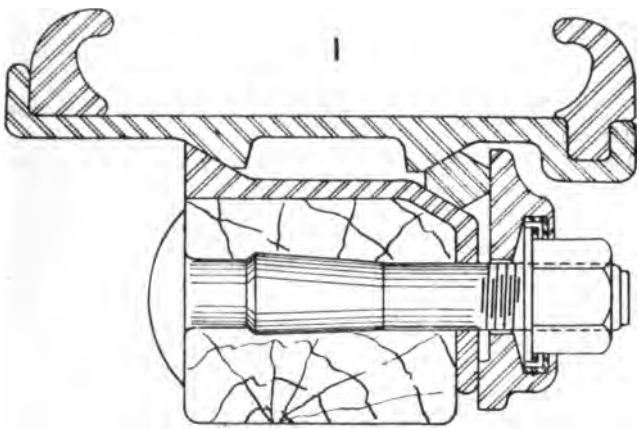

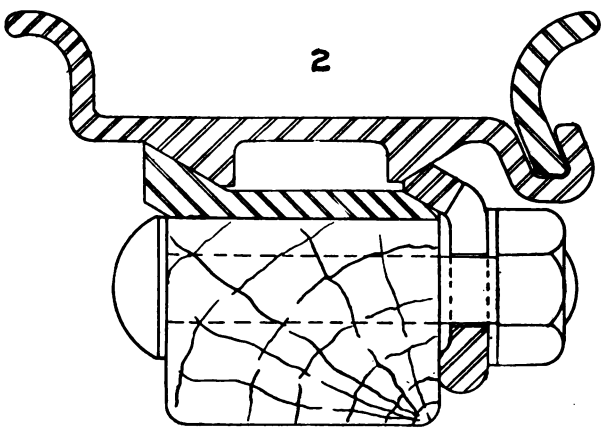

Digitized by Google

The felloe band and wood in both drawing No. 1 and No. 2 are the same, but in No. 1 a clincher rim is mounted, while in No. 2 a straight-side rim is mounted. Both tire-carrying rims are transversely cut and after demounted from the felloe band, can be collapsed and the tire removed.

In Fig. 8 is shown an example of a cold-rolled felloe band for demountable rims which I suggest for a standard.

This felloe band is so designed as to take either straight-side or clincher tire-carrying rim, and permits nearly the same variety of locking devices as are at present in use. The clearance between the felloe band and the under side of the rim is sufficient for the majority of rims of this type in use today. The location of the bolt-holes through the wood felloe is such that practically all the locking devices can be modified to use them to advantage. The band has sufficient section to properly pull and hold the wheel into form, when properly applied.

VI. THE DEMOUNTABLE-DETACHABLE RIM

In Fig. 9 are shown examples of two popular forms of demountable-detachable rims.

In this case, although the felloe bands are very different in detail, the

FIGURE 10

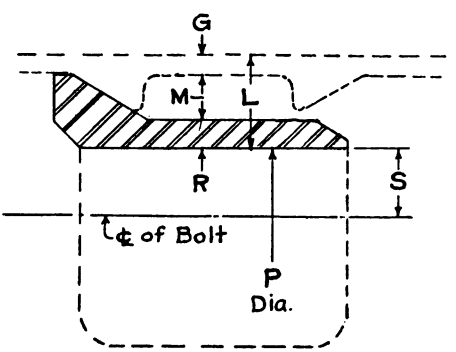

SIZE	G	M	R	L	S
3½	.156	.312	.187	.656	.437
4	.156	.312	.187	.656	.437
4½ & 5	.172	.312	.187	.672	.437

Inside diameter of Felloe Band, P = Tire Seat diameter of Rim, minus 2 x L

Example:- 34" x 4" Felloe Band, P = 26 - (2 x .656) = 24".688

Digitized by Google

tire-carrying rims can be interchanged upon them. As is readily noted the tire can be removed by simply operating the detachable feature of the tire-carrying rim without the necessity of demounting the rim from the felloe band. In drawing No. 1 a fastening device using an open-end wedge-ring is used, while in drawing No. 2 the wedge-clip fastening without wedge-ring is used. Either type of fastening could be used on either felloe if the bolt-holes were standardized.

In Fig. 10 is shown a hot-rolled felloe band for demountable-detachable rims which I suggest for a standard.

Practically all of the hot-rolled demountable-detachable tire-carrying rims will either fit or can be modified to fit this felloe band, and any of the fastenings used with the same can also be used if modified to take bolts fitting in the holes located in the wood felloe, as shown. The clearance allowed between felloe band and rim is sufficient, and the section of band large enough to properly hold the wheel. The band is a simple one to roll and exactly checks with a great many now on the market.

For all demountable and demountable-detachable rims I suggest bolt-holes of 7/16″ diameter, and the use of six bolts for all sizes under 36″ tire-diameter, and eight bolts for 36″ tire diameter and all sizes over that.

FIGURE 11

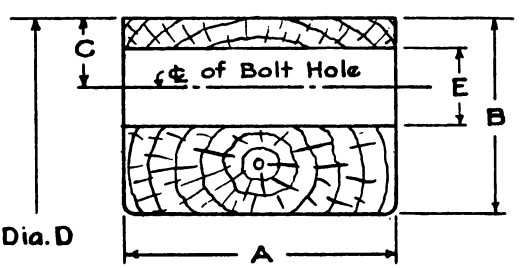

SIZE	A	B	C	E	DIA. D RIM TYPES I, II & III	DIA. D RIM TYPE IV	DIA. D RIM TYPE V
30 x 3½	1.50	1.25	.438	.438	22.688	22.000	21.688
32 x 3½					24.688	24.000	23.688
32 x 4	1.75	1.25	.438	.438	23.688	23.000	22.688
34 x 4					25.688	25.000	24.688
34 x 4½	2.00	1.25	.438	.438	24.656	23.968	23.656
36 x 4½					26.656	25.968	25.656

Digitized by Google

To recapitulate, the foregoing suggested standardization of rims gives the following five types.

I Standard One-Piece Clincher Rim.
II Standard Quick Detachable Clincher Rim.
III Standard Quick Detachable Straight-Side Rim.
IV Standard Demountable Felloe Band.
V Standard Demountable-Detachable Felloe Band.

The wheel-makers would be especially benefited by such a standardization, as the same wood felloe and wheel can be used for *I, II* and *III* above, *IV* and *V* each require its own wood felloe and wheel, and furthermore it appears quite possible to make the section of the wood felloe the same in all of the above five types.

In investigating present practice in felloe design, we find that sometimes the size of the spoke is specified and the felloe made wide enough to receive it; at other times the type of rim to be used is specified and the felloe is designed of good width to take the rim or felloe band. The depth of wood felloes manufactured by the different wheel-makers for pleasure automobiles varies but very little. Experience and practice seem to point out that good hickory felloes made to the dimensions listed in Fig. 11 give ample strength when built into pleasure automobile wheels of proper design, when any of the foregoing rims or felloe bands suggested for standardization are used and properly applied. Fig. 11 represents the average practice and felloe section design of the wheel-makers of this country and also incorporates proper diameters to take said rims and felloe bands.

I suggest these wood felloe dimensions as a standard to be used in all wheels for pleasure automobiles.

PLEASURE CAR WHEEL FELLOE BAND STANDARDIZATION

By C. C. Carlton

(Affiliate Member Representative)

The Pleasure Car Wheels Division of the Standards Committee of the Society was created to study various types of pleasure car wheels with particular attention to diameters, to various types of steel felloe bands and to the various methods of carrying pneumatic tires thereon. From this standpoint, pleasure car wheels can be divided into three classes—namely, those equipped with one-piece regular clincher rims; second, those equipped with quick detachable rims requiring no steel felloe, and third, those equipped with a steel felloe band upon which is mounted a demountable rim.

I believe I am safe in saying that there is no part of the automobile in which there is more variation and in which at the same time there is

Digitized by Google

so great a possibility of standardization as the wheel. The types of tire-carrying rims being manufactured number about fifty. The types in general use actually run over twenty. The first logical step presenting itself to the Pleasure Car Wheels Division is the possibility of a standard wood wheel dimension. With this accomplished, the next step would be toward a standard steel felloe band for use with demountable rims. A third and more complicated step would be toward the standardization of the tire-carrying rim itself. The Clincher Automobile Tire Manufacturers' Association, with a membership comprising the chief tire manufacturers of America, has standardized the inside diameter or contour of rims adapted to either straight-side or clincher tires, and has also standardized the circumference of the tire seat. But this association does not concern itself with the diameter of the felloe, or with the various contrivances for mounting the rim or attaching the tire.

ONE-PIECE REGULAR CLINCHER RIM

The simplest form of automobile wheel is that carrying a regular clincher rim. The rim is practically standardized at the present time, the only variation possible being in the thickness of the steel from which the rim is manufactured. This variation is so slight that for all practical purposes the wood wheel may be considered already standardized.

QUICK DETACHABLE RIMS

The quick detachable rim, whether for clincher or straight-side tires, varies only in the thickness of the steel itself, and in the method for detaching the tire. For all practical purposes it may be said that the wood wheel on which quick detachable rims are used, is already standardized, the only variation now being the thickness of the steel section. The only further step that can be made in the standardization of the wheel carrying a quick detachable rim is to standardize the device for detaching the tire, and there are so many greater problems presenting themselves that it seems well to forego any further action along this line, for the present, at least, especially in view of the fact that the quick detachable rim has been practically displaced by the demountable.

DEMOUNTABLE RIMS

The real problems, then, confronting the Division are those presented by the demonntable rim. The first object of the committee, I believe, should be to arrive at a standard wood wheel dimension, the accomplishment of which would surely be most welcome to all wheel manufacturers as well as automobile builders. After this is accomplished, if a standard steel felloe band can be accepted, the same as the Society has succeeded in accomplishing for truck wheels by the acceptance of the S.A.E. band, the struggle will then be past the crisis. It seems of much less importance that the demounting features be standardized or that the method of attaching the tire be made uniform. But the first complication arises from the fact that consideration of wood wheel diameters and felloe band contours involves the nature of the rim base itself, and the respective form of demounting feature. Likewise, an apparently slight change in the

Digitized by Google

steel felloe band may mean an entire change of the rim base. No standardization is possible, however, without working some hardships upon the various manufacturers of the product to be standardized. Thus the standardization of the S.A.E. band forced the majority of solid tire manufacturers to discard not only their removable rim equipment, but even affected the construction of the truck tires themselves. Consequently, after the Society of Automobile Engineers has accomplished without fear or favor the standardization of the S.A.E. band, it is, indeed, well equipped to undertake the pleasure car wheel standardization which concerns a much greater number of manufacturers, but does not involve any more radical changes.

DEMOUNTABLE RIMS

Two Distinct Classes

Consideration of the adoption of a standard wood wheel dimension for all demountable rims, involves at once the type of steel felloe, which in turn is governed, first, by the device by which the tire-carrying rim is fastened, and, second, by the nature of the rim base itself. Practically all of the demountable rims in common use—in fact, considerably over 90 per cent. of those purchased by the car manufacturers to-day—can be divided into two classes:

First—The so-called local-wedge-type rim, which is seated upon a felloe band manufactured from straight bar steel, flanged up in some form at the back side, the bearing at the front being secured by a type of local wedge, which is forced flat against the steel felloe on the one side and

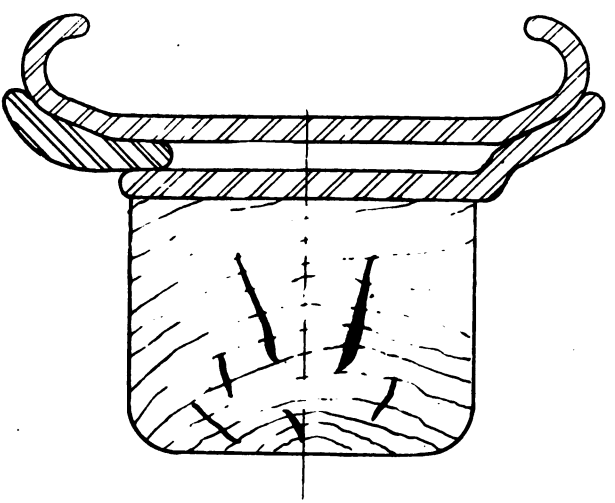

Fig. 1.

Digitized by Google

upon which the tire-carrying rim rests on the other. This type of rim is illustrated in Fig. 1.

A type of felloe can very readily be adopted upon which all rims which present a comparatively flat surface on the under side, can be mounted. I believe no one will deny that such demountable split rims as the Baker, Detroit, Kelsey, Stanweld and Prudden, can without much difficulty be adapted to such a standard felloe band. Whether the rim is straight-side or clincher, need in no way be considered. In this type of rim the rounding edge of the under side of the rim itself rests directly upon the flange of the felloe band on one side and upon the wedges on the other.

The second class of rim above mentioned is equipped with two beads on the under side of the rim base. The rims in this class are for the most part quick detachable as well as demountable. The felloe band itself must be a hot-rolled section with a flange or bevel on the back side, upon which the bead of the rim rests, as illustrated in Fig. 2. Whether this rim be for straight-side or clincher tires or universal is immaterial as far as the present discussion is concerned.

This type of rim depends for its fastening device upon either a continuous wedging ring or upon a local wedge which has a similar bearing. This type is in use by a very great majority of American cars selling at $1,500 or above. Such rims as the Firestone, Kelsey universal, Goodyear and Standard universal are in this class.

The members of the Pleasure Car Wheels Division, who have spent much time in the study of the problem indicated, will admit, I believe, that it will be a comparatively simple matter to determine upon a set of wheel dimensions and a set of steel felloe bands, to which could be adapted with only slight changes, considerably more than 90 per cent. of all the rims of this type in common use. This would be a step forward, but to have accepted two S.A.E. standard truck felloe bands, we will all

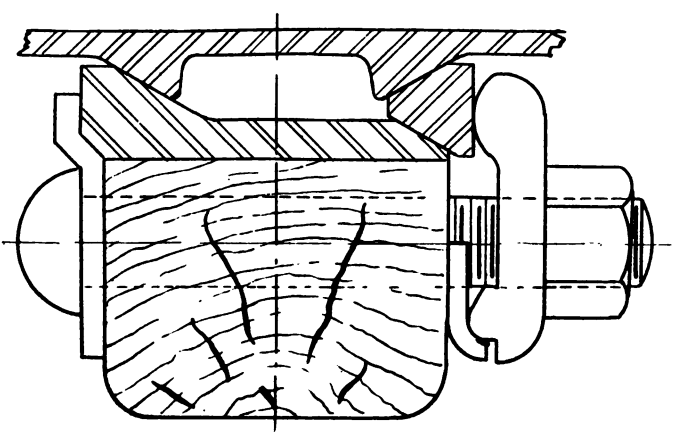

Fig. 2.

Digitized by Google

admit now, would have been a mistake. It will require much courage and deliberation on the part of the Society of Automobile Engineers to accept one steel felloe band with one wood wheel dimension as recommended practice in the mounting of pneumatic tires, but standardization which compromises is weak. After much careful consideration of the hardships that will be worked upon manufacturers the first year, I submit the following:

The Clincher Automobile Tire Manufacturers' Association has standardized the tire-seat diameter and the inside contour of the tire-carrying rim, because of the necessity of a fit as near perfect as possible for pneumatic tires upon the rim base. I believe that the standardization of a felloe band with its corresponding wood wheel diameter, which will require all rims to have a perfect seating at the back throughout the entire circumference, upon a hot-rolled felloe band section and a similar seating at the front side, is equally as important from the standpoint of tire service. The aim of the pneumatic tire manufacturers is to hold the tire as rigidly as possible in the rim; therefore, if the rim base does not have a bearing as near uniform at all times as is possible, the best of tire and wheel service cannot be secured. When the Pleasure Car Wheels Division first began its deliberation, Mr. H. S. Firestone submitted the idea of one standard felloe band and one wood wheel dimension for all demountable rims. Having in mind only the advancement of the art and the attainment of the greatest possible service of the automobile wheel as a unit, he offered the free use of mill rolls at the Carnegie Steel Co., from which proper standard felloe bands could be rolled. The Goodyear Tire and Rubber Co. made a similar offer of rolls at the Cambria Steel Co. Thus one of the first hardships of possible standardization is eliminated. Every type of demountable rim in common use can be adapted to fit this felloe band by the attaching of a bead similar to the one shown in Fig. 2 above. This felloe band insures the only mechanically perfect bearing between tire rim and felloe band. All demountable rim bases can be remodelled to fit this felloe band and the clearance between the band and the rim is sufficient to allow the use of either a continuous wedging ring or local wedges. To insure a standard wood wheel diameter calls for the adoption of but one rim dimension as standard—namely, the difference between the outside diameter of the wood felloe and the diameter of the tire seat.

It is not within the province of this paper to attempt to work out recommendations in detail, as this is a matter which can readily be solved by the Pleasure Car Wheels Division.

Summarizing, I believe it is entirely possible to standardize the section of wood felloes for the three types of rims—clincher, detachable and demountable. Further, that a standard wood wheel diameter for each size of wood wheel can and ought to be adopted, and that finally the aforesaid will make possible the adoption of one steel felloe band, upon which can be applied all types of demountable rims. Past and present practice make readily feasible the standardization of wood felloe dimen-

Digitized by Google

sions and I firmly believe that the advancement of the art demands the standardization of one felloe band.

DISCUSSION

R. S. BRYANT:—I submit herewith a drawing giving the cross-section of a number of various types of rims in general use, showing the variation in the present outside diameter of the wood wheel felloes. The drawing shows very clearly some of the difficulties involved in bringing the felloes to any one standard, not taking into consideration the shape of the steel felloe band itself. You can understand readily from the drawing that the wheel-maker is not encumbered with a number of different

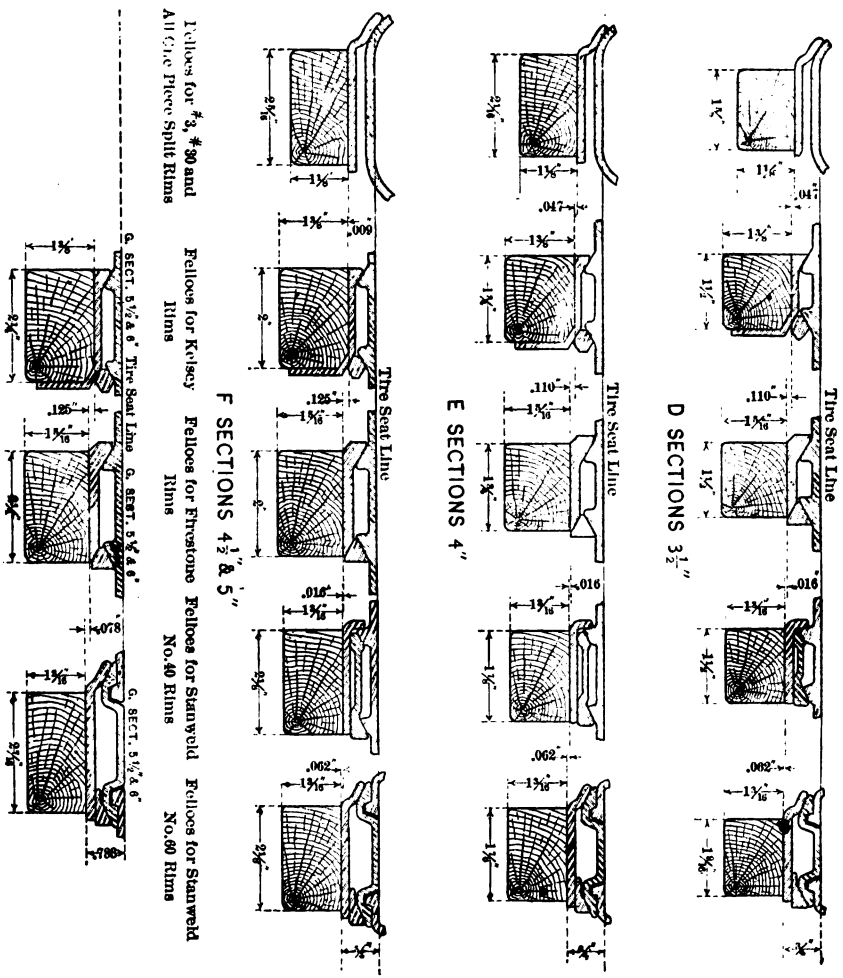

Digitized by Google

sizes of felloe stocks. He can virtually put all the demountable wheel felloe bands upon two sizes of wood felloes, which would be necessary under practically any circumstances. All of the diameters are such that the wheel builder has only to carry two sizes of wood felloe stock to accommodate all the various types of rims.

I am very much opposed to the type of felloe band proposed in Mr. Carlton's paper. I think it is not right in theory or practice. A felloe band designed with a bevel on the outside does not support the load properly and it is practically impossible to keep the rim tight on the wheel. The load is carried entirely too much by the bolts.

RUSSELL HOOPES:—I wish to speak of the permanent felloe band. I think that it is a mistake to have the bevel on a permanent felloe band shown in Fig. 10 of Mr. Hall's paper. As Mr. Bryant says, the band should run out straight, there being a bevel on the continuous wedge, which would give a better bearing on the permanent felloe band. Fig. 10 shows a radically wrong construction.

E. R. HALL:—With the bevel on the felloe band the wedge ring or individual wedge will be forced upward as well as inward when the fastening device is tightened, thus bringing same to bear against the top rim with less side motion than if the felloe band were not beveled, with no consequent upward motion in tightening. It is desirable to have as little side motion as possible in locking the rim, so that the tolerance in rim diameter can be readily taken up without placing the locking bolts and clips in an extreme position for which they were not designed.

HENRY SOUTHER:—These papers have illuminated the subject to such an extent that the labors of the Pleasure Car Wheels Division will be lessened materially. I doubt very much if those who have not been closely associated with the matter realize what a lot of detail Mr. Hall and Mr. Carlton and their assistants have waded through in order to simplify the problem as much as they have. It has many complicated sides and they have brought it down to something understandable.

E. R. HALL:—In my paper I suggest the possibility of standardizing two felloe bands. Mr. Carlton points out the possibility of standardizing one. If it were possible to standardize to that extent, one standard felloe band would certainly be preferable to two. Both papers are extremely radical and I am of the opinion that a great work will have been accomplished if we can even reach as few as two standard felloe bands. We should never, however, lose sight of the possibility of reducing to one standard band.

Digitized by Google

MOTOR TRUCK TIRES

By J. E. Hale

(Member of the Society.)

The Truck Standards Division in its efforts to arrive at a universal schedule of solid tire carrying capacities satisfactory to all concerned, discovered that the situation is really quite complex and decided therefore that a synopsis of the solid tire situation as a whole might be worth while. As an introduction let me state that there is almost no opportunity to resort to theories and exact formulas in solid tire design, a fact which will be readily appreciated after consideration of the discussion which follows; experience and judgment being by far the chief requisites for producing results. It is fair to add, however, that the application of good engineering practice and methods can reasonably be expected to produce better results than could be obtained from the hit-or-miss attention of salesmen and factory workmen. It is unfortunate that the art has not progressed sufficiently to permit the presentation of data and facts which can be considered at all complete or satisfying. However, even though the absence of theories and data is so regrettable, I hope, since the truck tire problem is so intimately connected with the truck industry, to find that the following remarks will prove of interest, and especially that they may serve as a basis of starting something for the betterment of the situation.

Taken in a broad sense undoubtedly economy of truck operation is the real issue. It follows therefore that if an "economical tire" could be evolved an ideal solution would be at hand.

Solid tires in service under certain operating conditions give certain results in the performance of their functions. These results are dependent on the tires themselves and on the conditions under which the tires are used; consequently we may propose an equation which indicates a balancing condition as follows:

$$\left[\begin{array}{c}\text{results}\\ \text{of service}\\ \text{perform-}\\ \text{ance, which}\\ \text{may be}\\ \text{termed}\\ \text{"commer-}\\ \text{cial}\\ \text{proper-}\\ \text{ties"}\end{array}\right] = f\left[\left(\begin{array}{c}\text{Operating}\\ \text{conditions}\end{array}\right) \;\&\; \left(\begin{array}{c}\text{Tire}\\ \text{details or}\\ \text{physical}\\ \text{properties}\\ \text{of the}\\ \text{tires}\end{array}\right) \;\&\; \left(\begin{array}{c}\text{Selling}\\ \text{cost}\end{array}\right)\right]$$

Expanding the terms in parenthesis by itemizing the features pertinent to this discussion we have:

Digitized by Google

$$\left(\begin{array}{c}\text{Cost per tire-mile}\\ \hline \text{Durability (Total Mileage)}\\ \hline \text{Resiliency (Power Consumption)}\\ \hline \text{Cushioning-effect}\\ \hline \text{Reliability}\\ \hline \text{Service cost}\\ \hline \text{Tractive grip}\end{array}\right) = f \left(\begin{array}{c}\left(\begin{array}{c}\text{Loading}\\ \hline \text{Speed}\\ \hline \text{Spring-suspension}\\ \hline \text{Road surfaces}\\ \hline \text{Topography}\\ \hline \text{Weather}\\ \hline \text{Driver}\end{array}\right) \\ \&\\ \left(\begin{array}{c}\text{Structure}\\ \hline \text{Diameter}\\ \hline \text{Width}\\ \hline \text{Shape cross-section}\\ \hline \text{Tread rubber}\\ \text{Toughness}\\ \text{Attrition-resistance}\\ \text{Plasticity}\\ \hline \text{Scheme of attachment}\\ \hline \text{Weight}\end{array}\right) \\ \& \left(\text{Selling cost}\right)\end{array}\right)$$

The "commercial properties," representing as they do the results of service performance, are of particular interest as they are a measure of the satisfaction received. Cost per tire-mile, durability, tractive grip, service cost, and power consumption are all capable of being expressed by exact numerical values. Cushioning effect and reliability are indefinite but none the less important.

The "operating conditions," loading, driver, and to some extent, choice of road surfaces are under the control of the truck owner. The spring suspension is wholly and the loading to some extent under the control of the truck designer. Topography, weather, and in part the road surfaces must be accepted as they are. Of the operating conditions, loading and speed alone may be expressed in numerical values.

The items under "tire details" pertain to the physical properties of the tires themselves and are self-explanatory.

In this discussion it may be noticed that cost or money value is mentioned only in connection with the commercial properties of the tires. Of course the item of cost is present on the other side of the equation in the various subdivisions of the "tire details."

Without being specific as to the precise relation between cost and tire details, let it suffice to say that the value of the finished product is largely in the materials which enter into its fabrication.

This equation is explained as representing a balancing condition. Of course this is true enough if we have been careful to include all the component subdivisions relative to the main parentheses of the equation. It will shortly be pointed out that practically all the terms on both sides are variables between rather wide limits and that broadly speaking the whole situation centers about what we do not know and what we want to know about the effect produced on the "Commercial Properties" by changes or alterations of the various "tire details" or "operating

Digitized by Google

conditions." To take an example, we might accumulate data upon a certain tire of average "physical properties" and which had been in service under average "operating conditions" (Chicago for instance) and for commercial properties we would find the cost per tire-mile to be ¼c. The mileage given, 10,000, the power consumption, 9/10 horsepower-hour per ton-mile per tire, the tractive grip represented by an average coefficient of friction of .40, a service cost of 1¾ hours interruption of service in changing tires, and the cushioning in its effectiveness to reduce destructive vibration while not capable of definite expression in figures is nevertheless a very important and definite quantity.

Now, if we change any of the variables on the right-hand side of the equation this will naturally result in a change in one or more of the commercial properties. Assuming for instance that the speed (that is the average speed at which the truck is driven) be diminished, we will find the cost per tire-mile decreased, the durability increased, the resiliency altered, the cushioning effect increased, the reliability increased, the tractive grip probably increased and the service cost unaltered. On the other hand suppose we change one of the physical properties of the tire, say stiffen the compound. The cost per tire-mile would probably be reduced, the total mileage probably increased, the cushioning qualities decreased, the reliability unaltered, the tractive grip diminished, the service cost unaltered, and the power consumption decreased or increased according to road surfaces.

Although the circumstances are familiar to everybody, let us enter here as a matter of record and comparison the existing scheme of judging the satisfaction obtained from the service of solid tires. In a few cases, notably among the large owners, cost per tire-mile receives considerable attention, but in general it may be said that a tire which runs its mileage guarantee without developing any distressing symptoms is satisfactory, a tire that exceeds the mileage guarantee gets the business in the future, and a tire that fails to give the mileage gets a black-eye. Also it often happens that service helps to sell a tire.

The "commercial properties" should be discussed more or less in detail since they represent the satisfaction obtained from the use of the tire, and also the possibilities of choosing the best possible combination of component operative conditions and tire details to fulfill the requirements of the "economical tire." In what follows it should be borne in mind that economy of truck operation taken as a whole determines for our discussion the actual values of the commercial properties of the "economical tire."

COST PER TIRE-MILE

Obviously it is desirable to have the cost per tire mile as small as possible consistent with the complete qualifications for economical truck operation. This is one of the most important of the commercial properties in the matter of economy and it happens that it is dependent on practically all of the subdivisions of the operative conditions and physical properties of the tires. The better the road surfaces and more nearly

Digitized by Google

level the country, the lower the cost per tire-mile. Likewise the tires will show up better under a careful driver than one who does not try to favor them. As for weather, extremes of heat and cold have a detrimental effect on the rubber, consequently increasing the cost per tire-mile. Spring suspension is mentioned as one of the operating conditions. This may seem a little far-fetched, yet we know that the efficiency of the springs in performing their functions has a very decided effect on the life of a tire.

Considering now the load on the tire and the speed at which the truck is operated, all will agree that the lighter the load and the slower the speed, the lower the cost per tire-mile, but returning to our fundamental idea of economical operation of the truck there is undoubtedly one combination of load and speed (assuming tire equipment of specific "physical properties") which will give a maximum effect in the matter of truck operating economy, yet the cost per tire-mile will be greater than were the speed to be slower and the load less. Again by simply altering one of the tire details, say stiffening the compound, an entirely new set of relations will be established, with the result that the economical load and speed will differ from those of the preceding case. Change the structure, diameter, width or shape separately or collectively and our economical load and speed have to be sought anew and also a new cost per tire-mile.

DURABILITY

Strictly speaking durability is a property which is closely allied to that of cost per tire-mile and there is a strong temptation to believe that they are inversely proportional. The principal exceptions to this are to be found in the details of the tires themselves. Thus it is perfectly possible to compound the tread rubber to give a very low cost per tire-mile and at the same time produce a tire which would give but small total mileage. The same idea could apply in the case of the structure of the tire under certain circumstances. Apparently the predominant attitude of the wide-awake truck owners is decidedly favoring the choice of tires which run long mileages. The importance of uninterrupted operating schedules is undoubtedly largely responsible for this condition; moreover it is probably true that many owners would feel justified in sacrificing, if necessary, a slight saving in tire cost if it came to the point of choosing between the two properties.

RESILIENCY

Resiliency will presently occupy a very decidedly more prominent position in the list than it has in the past. The requirements of electric vehicle practice have for some time demanded the most efficient tires possible; some manufacturers even make the other commercial properties secondary to this one. Surely gas truck operators should recognize the possibility of greater economy from the use of efficient tires just as does the electric truck operator. An example will emphasize this point. It is very easy to pick out from among the brands and types of tires on the market those which will absorb 25 to 40 per cent. more energy

Digitized by Google

than the most efficient; consequently if a 3-ton truck consumes say from $400 to $500 worth of gasoline a year, a very considerable cash saving could be made by using more efficient tires. As the rubber is "lively" or "dead" (by virtue of the nature of the compounding) so will it be efficient or inefficient when measured for power consumption. The stiffness or plasticity of the compound also plays an important part in the determination of efficient performance. Efficiency is very dependent on the character of road surface over which the vehicle is operated, particularly as to the distinction between rough and smooth road surfaces. Other things being equal the soft tread rubber will give greater efficiency on the rougher roads.

From the foregoing it will be seen that the resiliency of the tire is largely dependent on the compounding of the tread rubber. To what extent it is dependent on the other physical properties of the tire is somewhat uncertain, but surely not to any marked extent. The efficiency varies slightly with extremes of heat and cold; also with different loads and speeds.

CUSHIONING EFFECT

The invention and especially the perpetuation of the India rubber tire were possible because of the benefit derived from the cushioning properties of the rubber as a lessener of uncomfortable and destructive vibrations. How many times has it been remarked that automobiles are possible because of the pneumatic tire? Is it not true that motor trucks would not be possible without rubber tires? Just think of a 3-ton truck equipped with steel-shod wheels rattling over the average pavement at 8 to 12 miles per hour—and the poor pavement!

Of course the plasticity or stiffness of the tread rubber is by far the most important item affecting this commercial property and it goes without saying that a soft yielding compound will protect the mechanism of a vehicle better than a hard stiff one. The remaining items of tire detail each influence the cushioning effect in minor ways. It is rather unfortunate that up to the present time the tire companies have found no way of making a tread rubber of exceptional cushioning qualities and at the same time of low cost per tire-mile. We find that the softer and more yielding the stock the better its quality must be to give reasonable service, and quality represents price. This fact is also particularly noticeable: Tires made of soft compounds are very much more liable to fail structurally under heavy loading. It might be interesting to remark that there is one critical load for each size tire and for each speed where the cushioning is most pronounced; that is, a lightly loaded tire will bounce and thereby exaggerate vibration; on the other hand a heavily laden tire will show less response in cushioning due to its already highly distorted condition. Tires are similar to springs in this respect.

RELIABILITY

The reliability of a solid tire in performing its functions needs very little comment. It is listed as one of the commercial properties because it is a property which is of considerable importance to truck operation

Digitized by Google

as a whole. In the case of truck tires this property is practically entirely dependent on the tire details themselves.

SERVICE COST

The remarks concerning reliability apply equally well as to service cost; in addition there is of course the question of attention on the part of the selling house.

TRACTIVE GRIP

The effectiveness of the traction of a tire is dependent on the coefficient of friction between the tread rubber and the road surface. Consequently compound, width, weather (wet or dry), loading and the character and condition of the road surface are the principal elements affecting traction. On dry surfaces there is no advantage to be found from the use of a notched or broken tread over the use of a continuous tread, for in either case the grip of the tire is dependent on the simple phenomenon of friction between the rubber and road surface. Wet or greasy pavements are well known to be annoying and often dangerous. The coefficient here is exceedingly low, ranging from .11 to .15 or .20, whereas it would be from .50 to .60 on dry pavement. I believe that under certain conditions the coefficient of friction between the tire and the surface can be greater than 1.00. This seems conceivable in the instance of a soft yielding tread compound on a firm rough surface.

WEAR AND FAILURE

So far nothing has been mentioned about the ways in which tires wear out or fail. This should be outlined briefly as several of the commercial properties are directly dependent on the wearing qualities of the tires. You will notice that the various items under each main subdivision are enumerated as forms of legitimate wear or as forms of abuse. The significance of this is suggestive rather than absolute, the idea being to convey the distinction which one would observe in the case of perfect service.

A—Abrasion of tread rubber, due to

1—Tractive effort 2—Natural wear of rolling friction 3—Skidding	Legitimate wear
4—Spinning wheels by quick starts 5—Sliding with brakes set 6—Wheels out of alignment	Abuse

B—Cutting, chipping, or spreading of tread rubber, due to

1—Sharp stones, glass, etc. 2—Poor road surfaces in general	Legitimate wear
3—Car tracks 4—Use of anti-skid devices	Abuse

C—Disintegration or deterioration of tread rubber, due to

1—Sun and heat 2—Allowing tires to freeze	Legitimate wear
3—Oil on garage floor 4—Heating by excessive speeding	Abuse

Digitized by Google

D—Failure of the tire structurally, due to

1—Overloading 2—Speeding 3—Shocks and impacts from reckless driving over uneven road surfaces	Abuse

E—Premature failure or wear due to imperfections of manufacture.

The foregoing is an exposition of the relevant elements entering into the determination of the proper tire sizes. This method of elaborating on the situation is apt to leave the inference that the situation is so hopelessly complicated that there is nothing in particular to be done except make the best of it. On the other hand, I realize that there are many who, although they will not dispute the truth of the facts presented, will be tempted to depreciate their significance, preferring to dispose of the matter by insisting that "tires are tires" and that it is up to the tire companies to produce the goods. Before us is a summary of the items by which the service performance of the tires are judged and an exposition of the factors on which these various items depend, and finally the possibilities to be taken advantage of in the way of attempting to regulate the tire problems toward more satisfactory ends. You gentlemen know to what extent operating conditions can be controlled and regulated. As for tire details those having a knowledge of tire design and manufacture realize that with proper attention to compounding and fabrication methods a wide variety of constant results is possible. I wish to bring out one point very emphatically, however: While it is possible to alter tire details so that results shall vary through a wide range, it is also true that if these details be altered with the idea of highly perfecting one commercial property, this may be at the sacrifice of some other property or properties of nearly equal importance.

What does the motor truck industry want as qualifications for a satisfactory motor truck tire? In other words what is the relative importance of the commercial properties? Are we getting all the cushioning effect desirable consistent with economy of truck operation? Should not more stress be laid on the property of power consumption for the ultimate benefit of economic truck operation? How much should we sacrifice in the cost per tire-mile property and the durability to balance the other properties for the good of economical truck operation? Manifestly all are not of equal importance. For instance if the cushioning effect be highly developed with the idea of decreasing the truck repair expenses by lessening the destructive vibration, this much is certain, the tread rubber will necessarily be of a soft yielding compound. But we will find the cost per tire-mile increased and the durability diminished very materially unless we diminish the load which the tires carry, which in turn will raise the ton-mile cost of truck operation. To a slight extent, with the introduction of additional cushioning effect, the resiliency and tractive grip may or may not be altered.

If the stiffness or plasticity of the tread rubber of the various brands and types of tires be compared, it will be found that there is a wide

Digitized by Google

variation. In spite of this, well-known makes of trucks in any locality, equipped with competing tires which exhibit these marked differences, will be found running side by side. Surely so important a property as that of cushioning effect should be more or less uniform under similar conditions. I often ask engineers, owners, and drivers whether they want a hard stiff tire which will give almost no cushioning to the truck, or a tire which will protect the truck even if the tire-mile cost is a little higher. Some have never given the idea any thought, some (users particularly) do not care anything about the tire so long as it wears, some are looking for information, and a few have such decided convictions in favor of proper cushioning effect that they will not use solid tires of any description and choose the more expensive pneumatic.

This illustration of the relations between cushioning effect and the plasticity of the tread rubber is typical of a multitude of combinations of properties and conditions which might be portrayed. It would be an endless and wearisome task to enumerate and discuss all these combinations.

At the present time the formalities of truck tire merchandizing are limited to a guaranty of perfection in workmanship and a certain maximum cost per tire-mile. Also, each tire company has its own special list of permissible loads which each size of tire may carry. Without dwelling on the shortcomings of this happy-go-lucky method of dealing in tires, permit me to call to your attention that in the iron and steel world it is customary to buy and sell material which fulfills the requirements of certain chemical or physical specifications. The art has been perfected to such an extent that the measurement of the elemental subdivisions is now a matter of every-day routine in the up-to-date office, and moreover it is recognized that buying on specifications is the only sane policy—fair to both purchaser and seller. Standardization is not by any means limited to steel; Portland cement, paints, chemicals, electrical apparatus, boilers, etc., are all more or less thoroughly standardized.

In outlining the solid tire situation I have proposed an equation representing a balancing condition between the results which the tires give in service on one side, and the details of the tires themselves, the cost of marketing, and the conditions under which they are used on the other. By developing this equation in detail I have attempted to emphasize:

1st. The complexity of the solid tire problem due to the innumerable variables into which the whole may be sub-divided.

2nd. The importance of recognizing that economy of truck operation in its broadest sense should be the guiding motive behind any solid tire considerations.

3rd. The fact that the performance of solid tires in service has never been given the proper attention in the matter of criticism from the angle of economic truck operation as a whole.

4th. The logic of recognizing the "commercial properties" and the desirability of discovering their relative importance.

5th. The limitations encountered in bringing about ideal conditions due

Digitized by Google

to practically positive inability to regulate or control the operating conditions which are included under road surfaces, topography, weather, and driver.

6th. The facts that the solid tires are still capable of considerable development and that this development is essentially a process of evolution and elimination; also that there are certain practical limitations in the production of the tires themselves which permit the attainment of high degrees of perfection of certain commercial properties only at a sacrifice of others.

CONCLUSION

In conclusion I simply venture a general summary. The ideal disposition of truck tire standardization would be to prescribe standards of commercial properties to be attained when the tires are in service under standard road surface conditions; the variables under this scheme would be the tire details. However, inasmuch as it would be impracticable, to say nothing of being cumbersome, to test each tire for the values of the commercial properties, to determine whether they come up to standards or not, it would develop that once we have arrived at and defined a satisfactory condition in the matter of service performance, the simplest proposition would be to take cognizance of the physical properties of the tires themselves and standardize them together with the loadings, speed, and spring suspension.

DISCUSSION

CHAIRMAN WALL:—Gentlemen, you have heard Mr. Hale's paper, which is now open for discussion. It is certainly a very important paper.

CORNELIUS T. MYERS:—That is the best exposition of the truck tire situation I have ever heard, and we ought to make some progress along the lines indicated. There is one item, however, to which I will take exception: the statement that with the more efficient tire there will be a considerable saving in gasoline. I think that the saving will be found not to amount to very much, due to the facts that the efficiency of a gasoline motor falls off very rapidly at the light loads (20-25 per cent.) at which the average motor operates fully 80 per cent. of the time; and that the performance of many carbureters suffers considerably under the condition of heavy throttling. I know of instances where the mileage per gallon on trucks when running without pay load was not as good as it was when the trucks were loaded. Under the present practice in average motor truck design and operation, I doubt very much whether there will be much saving due to a more efficient tire. I think a recognition of this might help the tire problem. The motor truck industry and the users of motor trucks most desire a tire which will have sufficient cushioning ability to relieve the truck from the bad effects of road vibration and give maximum mileage. We want to reduce the tire cost per mile, which is a large expense in truck operation. At the same time we do want the cushioning effect, which is very important. By efficiency as a general term I refer to the loss due to internal friction in the tire; strictly speaking it is the

Digitized by Google

ratio of the torque delivered by the tire to the torque received by it from the rim.

J. E. HALE:—Mr. Chairman, with your permission, I will amplify some of the statements a little further. A large proportion of the energy of a motor devoted to propelling the vehicle is consumed in internal friction in the tires themselves. In the matter of internal friction, what I meant to intimate was that this varies through a very wide range in the different brands of tires; in other words, the efficiency of the tires varies considerably on account of the variation in energy absorbed in rolling friction. Consequently, if the absorption of energy in the tires is really considerable, it follows that there will be a corresponding saving in gasoline if tires which do not absorb so much energy can be chosen.

C. O. SNYDER:—I would like to ask the previous speaker whether he has any actual figures on the difference in efficiency of the various qualities and types of tires he has referred to.

J. E. HALE:—The statements I made were founded on tests.

RUSSELL HUFF:—Mr. Chairman, the subject is very interesting, of course, but one on which it is very hard to get data, because it is theoretical. In our gasoline work it is very difficult to make measurements of horsepower consumption, due to different makes of tires being on the trucks. The man with the electric truck could get some very valuable data on this subject. The thing that interests us from a practical standpoint is how far a tire will go carrying a certain load.

CARRYING CAPACITY RATING

One important question is why the different tire manufacturers cannot adopt the same rating of carrying capacities for the same tire sections. There are now before the public four or more different tire manufacturers who use different carrying-capacity ratings. We are kept busy all the time trying to straighten out controversies between the user, the tire company and the truck manufacturer, on account of these different ratings. If all could get together and adopt a certain rating that we could work to in our designing, it would be a great help to the truck engineer and manufacturer.

R. J. FIRESTONE:—In deciding carrying capacity, there are three things to be considered: the speed of the truck, the diameter of the wheel, and the width of the tires. We worked out a table with those three things in mind and it was adopted by several tire manufacturers. For some reason they did not all continue to use this table. The carrying-capacity table we use now is the one which we all agreed upon as being as near right as possible.

J. E. HALE:—At the beginning of my paper I explained that the Truck Standards Division of the Society is attempting to standardize carrying capacities of the solid tire. It was in one of the committee meetings in discussing this subject that the suggestion was made as to the advisability of presenting a paper which would give a summary of the situation in general. The idea back of the carrying-capacity standardization is to prepare a list which shall be accepted as standard just as the S. A. E.

Digitized by Google

standard motor truck wheel dimensions have been accepted. When this is done all the tire companies will have to make tires suitable for service under the new standard carrying capacities. We are attempting at present to get the necessary information together.

R. J. FIRESTONE:—I suggest that the Society take up the question of getting such a standard. It would be of great value to the automobile manufacturer and relieve the tire manufacturer.

CHAIRMAN WALL:—As I understand it, what we want is scientific data from the tire companies. If we get those we can go ahead, but it appears that it is really up to the tire companies to furnish us with some information.

J. A. ANGLADA:—I would like to hear from some of the tire manufacturers as to some of the difficulties that we might encounter in trying to standardize the carrying capacities of tires. It seems to me, in view of the different forms of construction in use and different dimensions and resiliency, that each tire would have its individual characteristics, and that tires of different makes must necessarily have different carrying capacities, because of their peculiarities of construction and peculiarities of material.

R. J. FIRESTONE:—A real hard tire will, of course, carry more than a more resilient tire. But I think that the automobile manufacturers would probably eliminate the hard tire that would be injurious to the mechanism of the automobile. The more resilient a tire, that is, the softer the compound, the less length of service it will give.

J. E. HALE:—Upon reference to the equation given in the paper and noting the position occupied by the term "loading," or in other words, carrying capacity, it will be seen that this is dependent on every other term appearing in the equation. Consequently, certain values might be assumed for the terms which would permit a solution for the term to be evaluated. As an example, assume that we have a 5-inch tire and desire it to carry 2,500 pounds; what is the best combination of the remaining variables to give the most satisfactory performance in the long run? One of the most prominent factors which might arise is the stiffness of the compound. If we use a very stiff, hard compound, the tire will stand up very much better under the load of 2,500 pounds than if we use a soft yielding compound. On the other hand, a soft yielding compound will give the truck very much more cushioning effect than the stiff compound. Consequently, the tire manufacturers simply ask what the trade wants; the stiff hard tire which will give high mileage, or something of a compromise, a tire which cushions reasonably well but will give a little less mileage. Here again economy of truck operation as a whole should be the background of the consideration. Where is the happy medium? I am pretty familiar with the solid tire industry but I do not know where it is. I have, of course, some ideas on the subject but I am submitting the question in the hope of getting more light on it.

CHAIRMAN WALL:—It seems that we do not know exactly what we want. We do know what results we are aiming to get ultimately. How about making a test, Mr. Hale? Have you any definite plans?

Digitized by Google

TESTING CARRYING CAPACITY

J. E. HALE:—In the matter of the carrying-capacity lists in use at present, it happens that the Goodyear Company and the Firestone Company use the same list. In this list we find that a 36 x 4 tire, when used on a single wheel, carries 1,500 pounds, but if this 36 x 4 tire be put on a dual wheel, it carries 1,875 pounds. In other words, a 36 x 4 dual wheel, instead of carrying twice as much as the single, carries twice as much plus 750 pounds. Why should this be? It is really the most inconsistent thing I ever heard of. This is not casting any reflection on the Firestone company, because all the companies in America have resorted to the practice. It is not prevalent in Europe. I have for some time realized the need of a revision in carrying capacities but the thing which stumped us was the lack of data on which to base a new list. I am now in a position to make a very thorough test of this matter. I propose to make up a trailer train, using a 3½-ton truck and two trailers, which have roller bearings and are provided with correctly designed steering knuckles, so that they will trail after the truck perfectly. By equipping the trailers with 4-inch tires all around and superposing a different load over each axle, I will have tires in service under identical conditions in every respect except load. By running around the country for five or ten thousand miles, taking average road surface conditions, the tires will wear out under legitimate conditions and thereby give a comparison of tread wear with respect to the loading. With this information at hand it will be possible to plot a curve showing the relative tire wear, or, in other words, total mileage and load. This curve, by the way, will probably be asymtotic. By laboratory methods it is possible to get the relation between the 4-inch tires used in the test and the other sizes. Consequently, curves may be had for all sizes and subsequently other curves can be drawn which will enable us to pick out the most economical tire to use for any particular load, or, in other words, the most economical load for any particular size of tire. Of course, the matter of economy is largely the deciding feature in this consideration; that is why we chose the cost as a criterion.

In case anybody raises a question as to the absolute value of this method of testing, I will simply say that there might be some adverse criticism but the method is certainly far ahead of anything that has ever been tried and its accuracy in the matter of relative considerations is sufficient for it to constitute a reliable basis of procedure.

CHAIRMAN WALL:—This is certainly a good start in the right direction.

RUSSELL HUFF:—It seems to me that this question, like all engineering problems, must be settled on a compromise basis, as to compound and the guaranteed carrying capacity. I am confident, in view of some of the experiments we have made in the last six months, that it is possible to improve the compound of tires for trucks. There are extremes in softness and hardness, which we can get in solid tires. One of the most prominent solid tires today is exceedingly hard. It gives wonderful mileage, to be sure, but a tire that has been brought out recently by one

Digitized by Google

of the leading tire companies, outwore, in a test we made, two of these standard hard tires. This leads me to believe that it is possible to compound solid tires so as to get from 50 to 100 per cent. more mileage, if the tire companies are willing to so compound them. That has a bearing, of course, on the carrying capacity which we should adopt as standard. I am not sure whether the results we had were accidental, but they lead me to believe that there are some tricks in the compounding of rubber for solid tires which the rubber companies know of but are unwilling to divulge or make use of at the present time.

J. A. ANGLADA:—I would like to know whether it would be possible or practicable to determine any standard specification for resiliency, taking speed into consideration. A tire entirely suitable for an electric vehicle, might be unsuitable for a gasoline vehicle, on account of the higher speed of the latter. Is it possible to determine on a standard basis of resiliency? This seems to me to be the starting point.

CHAIRMAN WALL:—There is no question but that we should take into account the effect of tractive effort on the tires.

B. B. BACHMAN:—Mr. Hale's formula should probably be modified or extended to take into consideration certain characteristics of the truck, such as the form of drive and the load on the driving-wheels. It seems to me that they have a decided bearing on the subject. In connection with the spinning of the wheels by quick starts, sliding with brakes set, and so forth, I believe that more actual tire wear—it may be illegitimate but it is something we have to take into consideration—is produced by such abuse than by the total legitimate use of the tire.

In answer to Mr. Hale's question as to the importance of the various characteristics of, you might say, an ideal tire, I think that the first of the different items which enter into consideration is the durability of the tire. That may be a function of, or lead to, a hard tire. I believe that next is the efficiency of the tire. Outside of the question of resiliency, the wear and tear on the mechanism can be traced to the efficiency of the tire. I have made some tests in that connection with spring wheels. While the efficiency of those wheels was so low as to be extremely marked, I am convinced that use of devices of that kind, necessitating the excessive loading of the engine, due to the uphill effect in pulling, has a decided influence on the maintenance of the car.

As to the resiliency of the tire, I believe that that can be sacrificed to the other two considerations. That is a problem that we as practical engineers have to solve.

Some years ago we were rather favorable to the use of pneumatic tires under certain conditions on our 1½-ton truck. Some of our customers today who use pneumatic tires are very much in favor of them. From what investigation I have been able to make and examination of records I have had access to, I am convinced that taking all things into consideration there is no economy in the use of the pneumatic tire; that there is not by any chance nearly enough saving in the difference of mechanical repairs to offset the difference in tire cost; the cost of the

Digitized by Google

pneumatic tire is, of course, greater than the cost of the solid tire. We have been developing commercial cars for some time. The parts which failed failed on solid tires. Therefore, we have been raising gradually the standard of our vehicles to fit them for the results obtained in the use of solid tires; giving good service on solid tires, they will give good service on pneumatic tires. We have reached a point where we have left the problem behind us. I believe that is what we have to do in the use of the solid tire. The tire manufacturer, as I see it, has to give us a tire which will carry the loads at minimum cost.

As to the exact relation between the durability, the efficiency and the resiliency, I am unable to go into a problem so theoretical, as I am not familiar enough with the principles of tire manufacture. The effect of the lack of resiliency on the mechanism is, in my estimation, in the hands, first, of the truck manufacturer, who must perfect his product to meet the condition; and, second, to an almost equal extent, in the hands of the man operating the truck. The truck owner must, in the very nature of things, exercise sufficient supervision over the man who is driving the truck, to see that he is utilizing the mechanism within its limitations and getting the most economical results. This is a matter which neither the tire manufacturer, the truck manufacturer nor the user can control entirely; we must all get together and use some common sense to get results.

CORNELIUS T. MYERS:—I do not deprecate for a moment the desirability of an efficient tire. While an efficient tire seems to be one that will absorb the road vibration as well as give a light drawbar pull, I do not believe that it will be found, as Mr. Hale stated, that there will be a large saving in gasoline due to the fact that the tire is somewhat more efficient. I would like to ask the tire manufacturers whether it is possible to make softer tires—that is, tires which will better absorb road vibration, without having them show greater efficiency. Will such tires cost less per mile than if they are made to show greater efficiency as well? To my mind efficiency in a tire will not result in a saving of gasoline, although on an electric vehicle it will result in a saving of electric current.

J. E. HALE:—Carrying that idea of efficiency a little further, particularly in the case of pneumatic tires, there is a very great demand at present for efficiency of gasoline cars, and several of the large rubber manufacturers are putting a good deal of effort into the development of what is called a cord tire. In order to elucidate, perhaps, what I have said about the rubber tire consuming a large proportion of the energy delivered by the engine I will describe a laboratory test. We take samples of rubber having a cross-section of about ¼ inch and test them in a machine which gives a graphical representation on a card of the line of stretch or elongation and the force required to produce the elongation. The method is to carry this load up to a certain point and then back to zero again. We get a curve going up and another coming back very similar to the hysteresis curve of electricity. In stretching

Digitized by Google

rubber we do work on it, part of which is given back on allowing the rubber to recoil. The area of the loop is the work lost or dissipated in heat. It might also be compared to the total area under the upper line to give the efficiency. Of course, if we could devise a compound of perfect elasticity, there would be no loop; the line on the return would coincide exactly with the line going out. So far, nobody has succeeded in doing this. The point I want to make is that in solid tire compounds there is a very great difference in the amount of work returned by the tread rubber in recovery after distortion at the point of contact with the ground. Consequently, there is a very great difference in the amount of absorption of energy. Of course, the more inefficient compound will absorb more energy, which will in turn be dissipated by heat, a much more noticeable rise of temperature in the tread thereby taking place.

CORNELIUS T. MYERS:—Can a tire be built which will be soft enough to absorb road vibration, without going to the expense of making it an efficient tire? Suppose you sacrifice efficiency but still get the cushioning effect; will such a tire be cheaper than one which is both soft and efficient? Is it a practical tire to make?

J. E. HALE:—It probably is possible to do that, but the tire might not be durable.

CORNELIUS T. MYERS:—Of course, durability is of prime importance; but considering tires of equal durability, could you make an inefficient tire more cheaply for the same mileage than you could an efficient tire?

J. E. HALE:—I am not prepared to say.

CORNELIUS T. MYERS:—That is the point of my remarks. I think it might simplify the tire problem for gasoline truck service. At the present time gasoline trucks are as a rule so over-motored that at light loads they do not run with a gasoline consumption at all in proportion to the pay load on the truck. In tests I have made with a gasoline truck, with absolutely no load on (an empty chassis with not even a body), the mileage per gallon was less than when the truck was loaded to its full capacity.

G. L. MARKLAND:—Mr. Chairman, Mr. Bachman stated that there is absolutely no saving with the pneumatic tire on a light truck. We used the pneumatic tire on a truck but were buying so many tires that we concluded we would have to put on solid tires, which we did. First we broke the springs, then the crankshaft broke. The truck was lying around so long and so much of the hauling was done by the teamsters that we thought we would go back to pneumatic tires again. That experience lasted six months. I do not know how many tires we used to prove whether the solid tire was more efficient on the truck than the pneumatic tire, but we concluded that the pneumatic tire is more efficient; the bank balance was the greatest evidence in the case.

WALTER C. BAKER:—Efficiency in cost of running and efficiency in drawbar pull should be considered separately. I know that there is a great difference in the efficiency of cars as far as the drawbar pull per ton is concerned. A number of years ago I got a difference of 5 to 1;

Digitized by Google

a Palmer single tube tire showed one-fifth of the drawbar pull per ton of the average pneumatic. I suppose there are similar differences between solid tires. The amount of rubber in the tire must have a great deal to do with this efficiency, but I do not know whether it would be very noticeable in the cost of running a truck.

L. G. NILSON:—Within the last ten or twelve years I have had nothing to do with tires, but in the early days of the truck industry I had considerable experience.* We tried nearly every make of solid, endless tire, but our trucks were very heavy and the tires were generally overloaded. Our experience was that the part of the tire that came in contact with the ground was never worn out, but the tire was usually destroyed at the base, that is, the interior would be crumbled between the fastening flanges. Finally we came across the so-called block tire, which gave several times longer life than the solid endless. But I found that the block tire would consume about five per cent. more power than the solid endless tire, with, of course, a corresponding decrease in the mileage per gallon.

MR. HERBERT CHASE:—I believe it is generally conceded that solid tires offer less rolling resistance than most pneumatic tires. Mr. Myers spoke of getting more miles per gallon with a loaded truck than with an empty one. I would say that the gain is due to the greater efficiency of the motor when working up to or near full capacity. Four-cycle motors are inefficient when throttled because of low compression pressure.

CORNELIUS T. MYERS:—It is true that for a thorough analysis the efficiencies of the motor and tires should be separated. The results of such an analysis will I think show that the decreased load on the motor due to the use of more efficient tires will not result in a very material saving in fuel consumption. This is due not only to the lowered thermal efficiency of the motor at light loads, but to a considerable extent to the unsatisfactory mixtures furnished by most carbureters when closely throttled for these light loads. Even those carbureters which are either semi- or non-adjustable, and do not depend on the crude assistance of a spring-controlled air-valve for correct proportions of gasoline and air at varying speeds, suffer when closely throttled because the atomizing effect of the air passing the nozzle is then almost nil, due to low velocity. This atomizing effect is a most important one in carburetion—witness the number of mechanical mixing devices for use in the intake pipe, which almost invariably help a poor or poorly adjusted carbureter.

POWER AND PERFORMANCE OF GASOLINE MOTOR TRUCKS

CORNELIUS T. MYERS

(Member of the Society)

Eighteen months ago the writer presented to the Society a paper entitled "Motor Capacity for Motor Trucks," in which was given a for-

*Fischer Motor Vehicle Co., 1898-1904 (Gas-Electric).

Digitized by Google

mula for comparing the motor capacity (based on the A. L. A. M. rating) of the various motor trucks on the market. This formula was based on the characteristics of the truck—weight, motor dimensions and efficiency, gear-reduction, efficiency of the transmission system, and driving-wheel diameter. No attempt was made to go into the derivation of the formula, the object of the paper being to center attention on what seemed to the writer an unwarranted tendency on the part of designers of gasoline motor trucks to burden them with motors of too great capacity. Certain assumptions were made from the meager data then at hand, and comparisons were made with existing practice in motor truck design both in this country and abroad.

Shortly after the presentation of the paper mentioned, I was engaged on some work which put into practice the ideas referred to in the paper. A truck was designed and built and a number of tests made with it. The results tallied so closely with previous assumptions that I am led to believe that those assumptions are nearly correct for the average conditions under which such trucks operate in this country. The results are therefore placed before you for discussion, and the derivation of the formula will be given so that there will be no chance for misunderstanding as to its scope or limitations.

To recall the gist of the previous paper, calculations were made to reduce motor dimensions, gear-reductions, etc., to the force available at the driving-wheels, the tractive effort which the motor and transmission system of the particular truck were capable of exerting. This force, expressed in pounds, was divided by the total weight in pounds on the tires (consisting of the chassis, body and load) and the result was the "Tractive Factor" of the truck, expressed in pounds of tractive effort per pound of total weight. This term designates the ability of the truck to overcome certain resistances to propulsion, and must at least be equal to a "Resistance Factor," composed of the road coefficient, plus an assumed grade which must be climbed in high gear, plus any other resistance to propulsion—such as air resistance or the load imposed by a trailer. The road coefficients were calculated from figures given by Mr. Churchward on page 22, Vol. I., S. A. E. Handbook, for resistance to rolling in pounds per ton on solid tires. These figures divided by 2000 become the road coefficients, and if we add the assumed grade (expressed in per cent. divided by 100) we have the resistance factor for any particular type of road on such a grade, expressed in the same terms as the tractive factor. The two can then be equated for the purpose of checking or determining the motor capacity.

The formula was derived as follows:

Given the bore and stroke of a motor we can get the A. L. A. M. horsepower and determine the torque on the propeller-shaft.

$$\text{Torque of motor in lbs. at 1'' radius} = \frac{33000 \times \text{HP} \times 12}{2\pi \times \text{RPM}} \qquad (1)$$

Digitized by Google

As the A. L. A. M. formula is based on the output at a piston speed of 1000 feet per minute, and s being the stroke of the motor in inches,

$$\text{RPM} = \frac{1000 \times 12}{2s} \qquad (2)$$

$$\text{A. L. A. M. HP} = \frac{b^2 n}{2.5} \qquad (3)$$

Substituting (2) and (3) in (1) we have

$$\text{torque} = t = \frac{33nb^2s}{2.5\pi} = 4.2nb^2s \qquad (4)$$

This motor torque can be reduced to tractive effort E at the periphery of the driving tires as follows:

$$E = \frac{t \times \text{gear-reduction (R)}}{\tfrac{1}{2}\text{ dia. of driving tires}} = \frac{2tR}{D} \qquad (5)$$

Substituting for t we have

$$E = \frac{8.4nb^2sR}{D} \text{ in pounds.} \qquad (6)$$

Now the tractive factor TF, referred to above, is the tractive effort in pounds divided by the total weight in pounds on the tires; equals $\frac{E}{W}$, whence,

$$TF = \frac{8.4nb^2sR}{D \times W} \qquad (7)$$

All of the above is on the assumption that the motor develops at any speed a torque equivalent to its A. L. A. M. horsepower rating at that speed, and that the efficiency factor of the transmission system is unity; so that for practical use, other than a comparison of the relative motor capacity of a number of trucks, it is necessary to multiply the result by e_m (the factor representing the actual motor torque with reference to the torque based on the A. L. A. M. rating), and by e_t (the factor representing the efficiency of the transmission system); e_m varying between .90 and 1.4, and e_t varying between .70 and .85. Then (7) becomes

$$\text{"TF"} = \frac{8.4nb^2sR}{D \times W} \times e_m \times e_t = \text{"RF"} \qquad (8)$$

And

$$nb^2s = \frac{\text{"RF"} \times D \times W}{8.4Re_me_t} \qquad (9)$$

Digitized by Google

In the previous paper e_m was taken as 1.2, and e_t as 0.70. Using these factors in connection with four-cylinder motors reduced (8) to

$$\text{"TF"} = \frac{28.22b^2sR}{D \times W} \qquad (10)$$

Several have taken the stand that $e_m = 1.2$ is too high and that at present the average truck motor cannot be relied upon to perform at such a rate. In the light of some experiments made during the past year, $e_m = 1.1$ might be taken as a more reasonable specification for the time being. On the other hand, e_t, even for chain-driven trucks which are not new, it is believed will be close to 0.80 in well designed chassis, and in some cases exceed this figure; however, 0.76 is quite conservative, and using these revised figures in connection with four-cylinder motors (8) becomes

$$\text{"TF"} = \frac{28.2b^2sR}{D \times W} = \text{"RF"} \qquad (11)$$

and

$$b^2s = \frac{\text{"RF"} \times D \times W}{28.2R} \qquad (12)$$

"*TF*" need not be greater than the resistance factor, "*RF*," expressed in pounds of drawbar-pull per pound of total weight on the tires.

It may not be amiss here to repeat the road coefficients expressed in terms for use in these equations.

Hard, level asphalt	0.0100
Wood pavement	0.0115
Level macadam	0.0115 — 0.0300
Plank road	0.0090
Cobble stones	0.0175
Good dirt road	0.0110 — 0.0200
Ordinary country road (dirt)	0.0200
Sand	0.2000

The above figures are subject to some modification due to the variation in tire compounds, diameters, etc. The writer believes that under average conditions 0.0175 represents fairly well the coefficient of macadam and good dirt roads and the poorer stretches of city pavements. A truck, fully loaded, should be able to climb a 3 per cent. grade over such roads in gear, but much more than this is inadvisable because it burdens the truck with a powerplant and transmission out of proportion to the requirements for 80 to 90 per cent. of its work, except in cases of special service over normally bad roads and heavy grades. The sum of these two items, 0.0475, is the resistance factor, "*RF*." Where the body on the truck chassis is very large and the speed of the truck is comparatively high, an additional allowance must be made for wind resistance; but I believe that a "*TF*" greater than 0.0475 is hardly necessary for well-designed trucks of 1- to 7-ton load-capacity.

Digitized by Google

The truck referred to in the second paragraph of this paper was designed to carry a pay-load of 5000 pounds. The estimated weight of the chassis, body and load, was 10,000 pounds; the motor size was 3¾" x 5¼" (four cylinders); the gear-reduction on "high," 8.05 to 1; the diameter of the tires on the driving-wheels, 36". Applying these figures in (11) we have

$$\text{"}TF\text{"} = = \frac{28.2 \times 3\tfrac{3}{4} \times 3\tfrac{3}{4} \times 5\tfrac{1}{4} \times 8.05}{36 \times 10{,}000} = .0475$$

THE TRUCK TESTED

The truck was of conventional chain-drive type, built from parts largely purchased in the open market, but the general design was first carefully worked out, and every detail studied from four aspects—reliability, accessibility, efficiency and cost. The first two items were considered of prime importance, the third essential, and the last only when the first three were satisfied, although low cost was kept constantly in mind. Two general plans were made and discarded in favor of a third which seemed to be capable of fulfilling expectation on all four points. The mountings of the parts were planned with care that they should be simple as well as substantial; in fact, simplicity was the keynote of the chassis.

While the truck was built in accordance with some very definite theories, it was not built merely to demonstrate those theories, for the writer felt that previous experience fully warranted the lines followed. It was built as the first of a series to be placed on the market; and the trials were made in order to amply satisfy those interested that it would perform in accordance with certain standards and could be built within the range of a certain schedule of costs. The chassis was not a special one built to fit a theory instead of being laid down as a commercial proposition. It was put through a 1500-mile test in which it performed up to expectations. Some of the results of this test bear directly on the formulas given above.

The truck weighed 4800 pounds, including body, oil, water, gasoline, tool-kit, and a few spare parts. The pay-load carried throughout the greater part of the 1500 miles was 5600 pounds, which brought the weight on the tires up to 10,400 pounds. No attempt was made before starting to tune up the motor or other parts to their very best. These were assembled after an inspection and very few adjustments were made. A few accelerometer readings were taken to check the carbureter adjustment, and to ascertain in a general way whether the motor was developing its A.L.A.M. rated horsepower. As approximately rated-horsepower was indicated, nothing further was done; after a preliminary run of 50 miles under load, the truck was started across country.

The first run of 340.1 miles from Detroit to Pittsburgh was made in 3½ days. On this run one rear wheel twice went into the ditch; and in Cleveland one rear wheel went through a garage wooden floor. On all three occasions the truck pulled out under its own power without other

Digitized by Google

assistance, in spite of extreme frame distortion. In Cleveland all the load was removed and a block-and-tackle rigged from a beam overhead hooked to the felloe of the wheel that had sunk through the floor. As the truck moved forward under the power delivered through the other wheel, the depressed wheel was raised. On the other two occasions only half the load was removed. Although on each occasion the frame was very badly distorted none of the working parts was cramped, practically the full power of the motor being available as tractive effort under the emergency conditions. Unless a motor truck is so designed that this can be accomplished, a larger "*TF*" must be assumed and a proportionately larger motor installed.

The total amount of gasoline consumed on the first trip was 34.75 gallons—equivalent to 9.79 miles per gallon. The specifications called for a performance of 9 mi./gal. on hard level roads. The economy obtained was very satisfactory considering the many miles covered in low and intermediate gears. The amount of fuel given includes that used in starting up, doing a little cleaning, and waste of all kinds. Runs of 20 to 30 miles in and around Pittsburgh showed fuel economies well above 10 mi./gal.; equivalent to more than 25 pay ton-miles per gallon. The gross ton-miles per gallon in some instances exceeded 60.

Different makes of carbureter were carefully tested for comparison. While there was a very appreciable variation in the economy the differences (for the most part) were not as great as expected. The acceleration readings, however, with the various carbureters, differed considerably —some being nearly double others.

The oil used in the motor amounted to 1.5 gallons; equivalent to 266.7 mi./gal. The specifications called for 250 mi./gal. The performance was fair but not up to expectation. It was considerably bettered, however, in later runs when more care was taken to prevent losses.

Much time was spent in taking accelerometer readings, measuring grades, and getting fuel consumptions under varying conditions. A specially calibrated speedometer with a 30-mile scale, instead of the usual 60-mile scale made possible accurate checking of the speed of the truck; and two odometers checked the mileage. Some of the data collected afford interesting light on the formula for "*TF*." Calculating this for 10,400 pounds we get

$$\text{"}TF\text{"} = \frac{28.2 \times 3\tfrac{3}{4} \times 3\tfrac{3}{4} \times 5\tfrac{1}{4} \times 8.05}{36 \times 10{,}400} = .0457$$

Subtract the road coefficient of .01 for new smooth brick-pavement and we have .0357, which indicates that the truck will climb a 3.57 per cent. grade on high gear on this pavement. As a matter of fact it repeatedly climbed grades of 4 to 4½ per cent., indicating that either e_m was greater than 1.1 or that e_t exceeded 76 per cent. Accelerometer readings gave a coasting-resistance of 35 pounds per ton, which is equivalent to a resistance factor of .0175; and the average acceleration reading at 12 m.p.h. was

Digitized by Google

1.325 ft./sec./sec., which is equivalent to .0415. As .0175 was allowed for the road coefficient alone (in the paragraph following the tabulation of the various road coefficients), it follows from these readings also that e_m and e_t are greater than have been allowed for in (11).

Assuming $e_m = 1.1$, $e_t = 100$ per cent., and a driving-wheel diameter of 34"—the last because the distance from the center-line of the axle to the ground was actually about 17", due to the flattening of the tires under the effect of the load carried—we get "*TF*" = .0622. Adding to the acceleration reading .0412 the road coefficient .010 and dividing the sum by "*TF*," we get $\frac{.0412 + .010}{.0622} = 82.3$ per cent. for the efficiency of the transmission system under full motor torque, on high gear, at 12 miles per hour. Calculating, by means of the accelerometer readings, the horsepower being delivered by the motor, we have

$$(.0412 + .0175) \times 10{,}400 = 529 \text{ pounds Tractive Effort, and}$$

$$\frac{529 \times 17.6}{550 \times .83} = 20.5 \text{ horsepower,}$$

which tallies closely with the rated-horsepower at 955 r.p.m., plus the 10 per cent. given by the factor $e_m = 1.1$. Thus

$$\frac{3\tfrac{3}{4} \times 3\tfrac{3}{4} \times 4}{2.5} \times \frac{955}{1140} \times 1.1 = 20.6 \text{ HP.}$$

Comparing the accelerometer reading .0175 with the "TF" .0622, we find that the motor under normal road conditions is running at about 28 per cent. of its full capacity, and has a reserve of 2½ times the normal running power. While this proportion of power rating is not great enough to give the maximum gasoline mileage, it does very well for average conditions and leaves an ample margin of power for poor roads and moderate grades without the necessity of having to change gears. The "*TF*" for low gear figures

$$.0622 \times 3.65 \times .90 = .205$$

and deducting .0175 for the road coefficient we get a remainder of .1875 available for grade climbing on a country road—the equivalent of an 18¾ per cent. grade. The maximum measured grade encountered on the above-mentioned trip was 19.4 per cent., the road surface being of small round stones on a clay bed. The truck climbed it without hesitating.

As a check on carbureter design and adjustment I believe that the accelerometer, properly used, will yield a great deal of information. I have little faith in the results of block tests, for they do not impose operating conditions upon the apparatus tested. The criterion by which the product of our shops is judged is its performance *on the road,* and until we take pains to investigate this performance we are likely to go considerably astray.

Digitized by Google

As mentioned in the previous paper, the "*TF*" formula affords a ready means of comparing the "power" of gasoline motor vehicles. This is a subject which has suffered much in the hands of many associated with the motor industry, and possibly the formula will be the medium of dispelling some rather dubious arguments as to the value of large motors in gasoline motor vehicles of any kind. The formula as indicated in (8) is comprehensive, and unless every factor embraced in it is considered, there can be no just comparison of one chassis with another so far as its power-plant is concerned. As shown in (10) it affords a ready gage for the average truck at present.

For pleasure cars the constants must be modified for use in designing, and an additional coefficient for wind resistance added to the resistance factor "*RF*."

ELECTRIC TRANSMISSIONS FOR MOTOR CARS

By Justus B. Entz
(Member of the Society)

Electric transmission systems as applied to motor cars consist of methods of electrically controlling the transmission of the power of the engine to the wheels. It is necessary not only to control and transmit the power but to do so at varying speed and torque ratios while developing the full power of the engine. One method of electric transmission consists of a dynamo or electric generator driven by the engine and supplying electric energy to one or more motors connected with the driving wheels. Another method consists of a dynamo-electric machine connected with or mounted on the driving-shaft and adapted to assist the engine at times of heavy load, drawing its energy from a storage battery, and in turn charging at times of light load, becoming automatically a generator for that purpose and utilizing the surplus power of the engine. A third system of electric transmission consists of a dynamo-electric machine, one member of which, the field magnet, is connected to the engine crankshaft and takes the place of the flywheel, the armature being connected with the driving-shaft. This unit serves to transmit the turning effort of the engine to the driving-shaft by means of current established in its circuit, due to a speed-difference between its members on what constitutes the high speed of the electric transmission. This speed-difference is small, as the armature and field winding is short-circuited upon itself. Any effort exerted by the engine on one of these members, such as the field magnets, must be transmitted in full to the other member or armature which is mounted on the driving-shaft. The arrangement is similar to that in the familiar electric dynamometer used for engine testing, in

Digitized by Google

which the torque of the engine is measured by rotating one member by the engine and leaving the other free to revolve around its center but restraining it by an opposing resistance such as a spring balance or scales which measures its effort to turn and therefore the turning effort of the engine. This clutch-generator of the electric transmission constitutes a very elastic clutching and transmitting means, but is not by itself capable of transmitting more than the torque of the engine. For higher torque upon the driving-shaft, use is made of an electric motor whose armature is mounted upon the driving-shaft and which receives current from the first machine or clutch-generator. Thus on speed positions below the highest the motor is included in the circuit of the clutch-generator. If the windings of the two machines be the same, and the same current passing through each, the torque represented by that current which will be the same in each, and the electromotive-force will be the same in each for the same speed-difference between armature and field.

Thus if the full torque of the engine were transmitted for a slip or speed-difference between armature and field of the clutch-generator of 75 r.p.m., and the motor with the same electrical resistance were included in the circuit, the slip loss would be increased to 150; if the engine were running at 1500 r.p.m. the speed representing useful power would be 1350 r.p.m. at engine torque; but the torque on the driving-shaft will have been doubled because of the motor, and a C.E.M.F. will have been set up in the motor, which must be overcome by the clutch-generator, which results in a speed of 675 of the driving-shaft and a torque double that of the engine, the clutch-generator then having a slip of 825, 150 being due to the resistance of the clutch-generator and motor and 675 to overcoming the C.E.M.F. of the motor, the latter representing useful work in the return it gives to the driving-shaft in additional torque. Gradations of control in speed and torque are secured by means of varying the field strength of the clutch-generator and motor, as will be shown later on.

In order to make a comparison of the different methods of the transmission and control of the power of a gas engine to the driving-wheels of an automobile I show a few curves giving the characteristics of each type. These show the speed of the vehicle for different tractive efforts expressed in percentage of weight of car. In the case of the mechanical transmission, curves are shown for three different gear ratios, the intermediate being 1.6 times the reduction of the high and the low 3 times. The intermediate and low have been taken at 90 per cent. efficiency and the high at 100 per cent. efficiency. The speeds and tractive efforts shown correspond to those of a car of 4,700 pounds loaded, with 3¼ reduction on high and 36″ wheels.

The engine has a maximum horsepower of 42.5 at 1,500 r.p.m.

Referring to curve *I-I*, showing the performance in speed and tractive effort on the high gear of the mechanical transmission, if the resistance to motion on the level be as shown by curve *R-R*, the maximum speed would be 51 miles per hour, and the maximum grade that could be climbed

Digitized by Google

5 per cent., at speeds between 15 and 30 m.p.h., the climbing ability falling off at speeds above and below these points. As the engine commences to fall off rapidly in torque at speeds below 300 r.p.m., corresponding to

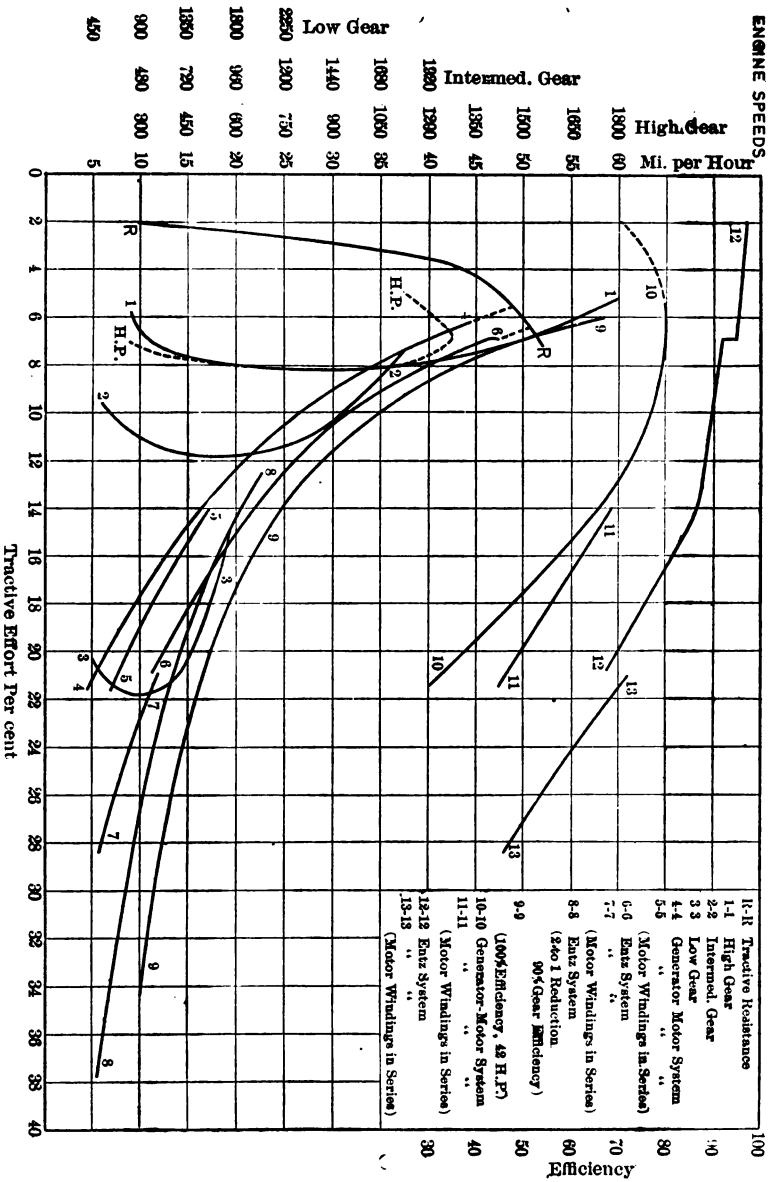

10 m.p.h., it becomes necessary to shift to a lower gear, in which case tractive efforts and speeds are obtained corresponding to those shown by curve *2-2* for intermediate gear, and curve *3-3* for low gear. On high gear the tractive effort at 1,500 r.p.m. is 6.9 per cent. and the maximum 81 per cent. at 900 r.p.m.

We will now consider the electric transmission of the engine power to the wheels and make a comparison between a generator-motor system, wherein the generator converts all of the power of the engine into electric energy and supplies it to the motor, and the type of electric transmission system wherein the generator acts also as a clutch and converts only part of the engine power into electric energy, and only when in the lower speeds.

The electric energy equal to the maximum horsepower of 42½ at 1,500 r.p.m. is 31,700 watts. We will consider that the same electrical units are used in each of the two above-mentioned systems. We will call the current which represents the full output of the generator at full field strength 100 per cent. We will call the C^2R loss at this current 2½ per cent. of the total input, for each armature and each field winding, and the core losses for full field strength and full speed difference 5 per cent. in each armature. The first losses vary as the square of the current and the core losses nearly as the square of the voltage, or the product of the field strength and speed, to which the voltage is equal.

In the generator-motor system with 100 per cent. current we have 2½ per cent. C^2R loss in each armature and field winding or 5 per cent. in generator and 5 per cent. in motor, a total of 10 per cent., which appears as a speed loss as it lowers the effective voltage by that amount, so that the vehicle speed is reduced from 50 m.p.h., corresponding to 1,500 r.p.m. of the engine, to 45 m.p.h. There is also 5 per cent. core loss in each armature or 10 per cent. total, corresponding to a reduction in tractive effort from 6.9 to 6.2 per cent. The total efficiency is 80 per cent.

In the electric transmission system the full torque of the engine is transmitted by the generator unit alone, short-circuited upon itself, and with no torque loss, but with a C^2R loss of 2½ per cent. in each armature and field, or 5 per cent. total, giving a speed loss of 2½ m.p.h, resulting in a speed of 42.5 m.p.h. at 6.9 per cent. tractive effort. To get double the torque on the driving-shaft with the generator-motor system, the current through the motor must be increased and supplied by the generator, which must have its voltage proportionately reduced. If we double the current, or make it 200 per cent., we will increase the torque about 2¼ times, equal to 14 per cent. tractive effort. The C^2R loss in the generator armature then is 2.5×4 — equal to 10 per cent. As the generator field is weakened the loss in it is reduced to 1 per cent.

The C^2R loss in the motor armature is 10 per cent.

The C^2R loss in the motor field is 10 per cent.

The combined core loss in the two armatures is 2½ per cent.

The total loss is 33½ per cent.

The efficiency 66½ per cent.

Digitized by Google

The vehicle speed at 14 per cent. tractive effort and 66½ efficiency is

$$50 \times \frac{6.9}{14} \times .665 = 16.4 \text{ m.p.h.}$$

To get double the torque with the electric transmission it is not necessary to increase the current, but the motor is included in the circuit of the clutch-generator and its torque added to that of the engine as transmitted by the clutch-generator and the latter slips a little more than one-half engine-speed to supply the necessary voltage for the motor.

The C^2R loss in the generator armature and field is	5	per cent.
The C^2R loss in the motor armature and field is	5	" "
The core losses in the two armatures is	2.5	" "
Total loss	12.5	" "
Efficiency	87.5	" "

As there is 2.5 per cent. core loss which is equivalent to friction, the tractive effort will be 2.5 per cent. less than double the engine torque, or $6.9 \times 2 \times .975 = 13.5$ per cent.

The speed is $50 \times \frac{6.9}{13.5} \times .875 = 22.5$ m.p.h.

To get three times torque with the generator-motor system we will figure on 300 per cent. current and 3½ times torque of 100 per cent. current.

The C^2R loss in the generator armature is	$2.5 \times 9 =$	22.5	per cent.
The C^2R loss in the generator field is		.75	" "
The C^2R loss in the motor armature and field is	$5 \times 9 =$	45.0	" "
The core loss in both armatures is		2.0	" "
Total loss		70.25	" "
Efficiency		30.0	" "

Torque $6.2 \times 3.5 = 21.5$ per cent. tractive effort.

Speed is $50 \times \frac{6.9}{21.5} \times .30 = 4.8$ m.p.h.

To get three times torque with the electric transmission we must double the current through the motor and reduce the field strength of the clutch-generator to one-half so that it can deliver double current.

The C^2R loss in the generator armature is	$2.5 \times 4 =$	10	per cent.
The loss in the generator field is		1	" "
The C^2R loss in the motor armature and field is	$5 \times 4 =$	20	" "
The core losses in both armatures is		2	"
Total loss		33	" "
Efficiency		67	" "

The tractive effort is $6.9 + 14 = 20.9$ per cent.

Digitized by Google

$$\text{Speed is } 50 \times \frac{6.9}{20.9} \times .67 = 11.1 \text{ m.p.h.}$$

The higher tractive efforts can be obtained in either system at a better efficiency by providing the motor armature with two windings and two commutators and putting them in series for maximum tractive effort. For example, in the generator-motor system for double the torque we can keep the current output of the generator at 100 per cent., the same as for full torque, and put the two windings of the motor in series, getting 14 per cent. tractive effort, and a generator loss of 5 per cent. C^2R and 5 per cent. core loss and a motor C^2R loss of 20 per cent., as the resistance of the motor windings has been increased by four times by putting them in series, and the motor core loss of 1¼ per cent.; total loss, 31¼ per cent.; efficiency, 68¾ per cent.

For 1½ times current we get a tractive effort of 21.5 per cent. with the motor winding in series, the same as we got before with three times current.

The generator C^2R losses in armature and field are	7.0	per cent.
The motor C^2R losses are	45.0	" "
The core loss in both armatures is	3.5	" "
Total loss	55.5	" "
Efficiency	44.5	" "

In the electric transmission system if we put the motor winding in series the current will not have to be increased over full-load current for three times torque, and we will get a tractive effort of 6.9 plus 14 = 20.9 per cent.

The C^2R generator loss is	5.0	per cent.
The C^2R motor loss is	20.0	" "
The combined core loss is	3.5	" "
Total loss	28.5	" "
Efficiency	71.5	" "

TABLE I

ELECTRIC TRANSMISSION SYSTEM

					Motor Windings in Series	
Current	100%	100%	100%	200%	100%	150%
Gen. C^2R Arm	2.5	2.5	2.5	10.0	2.5	5.62
Gen. C^2R Field	2.5	2.5	2.5	1.0	2.5	1.38
Gen. Core Loss	0	1.0	1.25	1.0	2.5	1.00
Motor C^2R Arm	0	2.5	2.5	10.0	10.0	22.5
Motor C^2R Field	0	1.0	2.5	10.0	10.0	22.5
Motor Core Loss	0	1.0	1.25	1.0	1.0	1.0
Total Loss	5.	10.5	12.50	33.0	28.5	54.0
Efficiency	95.	89.5	87.5	67.0	71.5	46.0
Tractive effort	6.9	10.2	13.5	20.9	20.9	28.4
Speed	47.5	30.5	22.5	11.1	12.	5.75

Digitized by Google

Tables (1) and (2) show the losses, efficiency, tractive effort and speed for both the generator-motor system and the electric transmission system.

In practice the series arrangement of the motor winding is not used, as sufficient maximum torque is provided without it, for every condition of road and grade usually met with. Moreover, if forced into it for a great length of time, as in climbing a mountain grade five or more miles long, the heating of the motor would be excessive. The use of a mechanical reverse, employing one or more pair of gears in the reverse gear-box allows a double-reduction between driving-shaft and wheels.

TABLE II

GENERATOR-MOTOR SYSTEM

				Motor Windings in Series		
Current	100%	150.	200.	300.	100.	150%
Gen. C^2R Arm	2.5	5.62	10.	22.5	2.5	5.62
Gen. C^2R Field	2.5	1.38	1.	.75	2.5	1.38
Gen. Core Loss	5.0	2.50	1.25	1.00	5.0	2.50
Motor C^2R Arm	2.5	5.62	10.0	22.50	10.0	22.50
Motor C^2R Field	2.5	5.62	10.0	22.50	10.0	22.50
Motor Core Loss	5.0	2.50	1.25	1.00	1.25	1.00
Total Loss	20.0	23.25	33.5	70.25	31.25	55.5
Efficiency	80.	76.75	66.5	30.0	68.75	44.5
Tractive Effort	6.2	10.0	14.	21.5	14.	21.5
Speed	45.0	26.5	16.3	4.8	17.2	7.0

Electric control is still used for all manipulations of the car, but with every control position giving double tractive effort, and a range of control not possessed by any other system.

Curve *4-4* shows the speeds and tractive efforts of the generator-motor system. Curve *5-5* shows the same with the motor windings in series.

Curve *6-6* refers to the electric transmission, and *7-7* the same with the motor windings in series. Curve *8-8* shows a 2:1 greater reduction with the electric transmission, the gears being taken at 90 per cent. efficiency.

Curve *9-9* shows the speeds and tractive efforts corresponding to the full power of the engine, 42.5 H.P., with no loss.

Curve *10-10* shows the efficiency of the generator-motor system and *11-11* the same with the motor windings in series. Curve *12-12* shows the efficiency of the electric transmission and *13-13* the same with the motor windings in series.

These efficiency and performance curves are for the maximum horse-power of the engine, that is with wide-open throttle at 1,500 r.p.m. The gasoline economy, however, is decided by the efficiency at about 25 m.p.h. and 3 per cent. tractive effort. In this case with the generator-motor system, we may assume 60 per cent. current and 80 per cent. motor field-strength, equal to 3 per cent. tractive effort, and can call the work done

Digitized by Google

20 per cent. of the maximum horsepower, which is equal to 20 per cent. of 31,700 watts or 6,300 watts. The generator will have full field-strength and 2½ per cent. loss. The generator armature will have a C^2R loss of $2.5 \times .6^2 = .9$ per cent. The C^2R loss in motor armature and field will be $5 \times .6^2 = 1.8$ per cent. The core losses in both armatures equal 2.5 per cent. The total losses are equal to 7.7 per cent. of the maximum power, which is equal to 2450 watts, making a total input 8,750 watts and the

$$\text{efficiency} \frac{6.3}{8.75} = 72 \text{ per cent.}$$

In the case of the electric transmission the current would be reduced to correspond to the reduction from 6.9 to 3 per cent. tractive effort, or from a slip of 5 to 3 per cent. at 1,500 r.p.m., which would be equivalent to 6 per cent. slip at 750 r.p.m., or 94 per cent. efficiency.

Referring to the efficiency curve it will be seen that up to the point where the engine is fully loaded in the high-speed position in the electric transmission system only one electric unit is in service, and that has only the losses due to resistance or what are known as C^2R losses; while the generator-motor system has both units in service and the C^2R loss of both, as well as the core losses of both, equalling a loss four times as great, as well as a reduced output due to the greater losses. Again, with exactly similar electric units used in each system the C^2R losses are the same in each when both units are in use, and the same current is used. In the generator-motor system both units are used and full current for 6.2 per cent. tractive effort, and the total loss is 20 per cent., 10 per cent. C^2R loss and 10 per cent. core loss. In the electric transmission system both units are used with full current for 13.5 per cent. tractive effort, and we have 10 per cent. C^2R losses, but only 2.5 per cent. core loss, as the speed-difference between armature and field of generator and motor is but one-half of what it is in the generator-motor system.

Again, with double current in the generator-motor system we have 14 per cent. tractive effort, the C^2R loss is 31 per cent. and the core losses 2.5 per cent. In the electric transmission system double current is at 20.9 per cent. tractive effort, the C^2R losses are 31 per cent. and the core losses 2 per cent. It will be noted in this last case, where the difference in core loss is small, that the difference in tractive effort for the same current is the torque of the engine as transmitted through the clutch generator, 6.9 per cent. The additional torque transmitted by the electric transmission over the generator-motor system with the same current in the units of each is the torque of the engine, plus the gain due to reduction in core losses. Also, as all energy loss appears as heat which causes a rise in temperature of the electric units, the size and weight of the units comprising the electric transmission system are very much reduced as compared with the generator-motor system.

In reference to the other electrical system, using a motor on the driving-shaft to help the engine at times of heavy load, the electric motor assists the engine driving-effort in the same way as the motor in the electric trans-

Digitized by Google

mission does, but the storage battery takes the place of the clutch-generator in supplying current to the electric motor. In this case the engine and electric motor must run at the same speed, as they are on the same driving-shaft, and unless an excessive weight of battery is carried it will be possible to add much additional driving effort only when the vehicle speed is low. If at 10 m.p.h. there is added 7 per cent. tractive effort to the 7 per cent. exerted by the engine, we have an output of $42.5 \times \frac{10}{50} = 8.5$ H.P. Assuming the efficiency of the motor at this low speed is 70 per cent., we would require 12.2 H.P. input or 9,000 watts. The lightest form of thin-plate high-discharge-rate storage battery gives 15 watts per pound when discharged at a rate that would empty it in 15 minutes. This would weigh 600 pounds, and automatic means would have to be provided to balance the input and output of the batteries. In the case of the electric transmission system the same electric energy is supplied to the motor for a speed-difference of the clutch-generator of 450 r.p.m. In other words, with the electric transmission and the engine running at 750 r.p.m. we supply continuously to the motor what would exhaust a 600-pound battery in 15 minutes with the engine running at 300 r.p.m., the car speed and tractive effort being the same in each case.

The sectional view of the system given herewith shows the crankshaft, to which is attached what is designated the clutch-generator, which has its field part *FR*, which carries the field winding *FW* and the pole-pieces *PP*. This field portion of the clutch-generator rotates whenever the crankshaft rotates. Within it is the armature *A* secured to the shaft *S*, which is continued rearward through a coupling *K* into another shaft *S*, and this in turn connects through a universal joint at *X* with the propeller-shaft of the rear axle.

The second part of this electrical unit is shown in the right end of the illustration, and is in all respects a duplicate of the clutch-generator shown at the left. This electric motor has an armature *A1* carried on the shaft *S*, so that both the armature *A* and *A1* are on the same shaft. Outside of the armature *A1* is the usual field part of the motor, comprising the field rings *FR*, field windings *FW*, pole-pieces and the usual brushes *B*.

The field *FR* can revolve and the armature *A* on its shaft *S* remain stationary. The field *FP* may revolve at a speed of 1,500 r.p.m. and the armature *A* at a speed of 500 r.p.m., giving reduction for low speeds. It is by varying the relative speed of the field *FR* and the armature *A* that speed-changes are accomplished. The manner in which the system works is as follows: On direct drive the clutch-generator is short-circuited on itself and rotates the armature *A* with it. There is, however, a slight slippage between the field *FR* and the armature *A;* if the motor were working at 1,000 r.p.m. the armature would be turning the propeller-shaft at approximately 960 r.p.m. In other words, there is a loss of 40 r.p.m. per 1,000 with the car running on a level road. If the car were mounting a heavy hill, when the engine would have to pull more, the slippage would

Digitized by Google

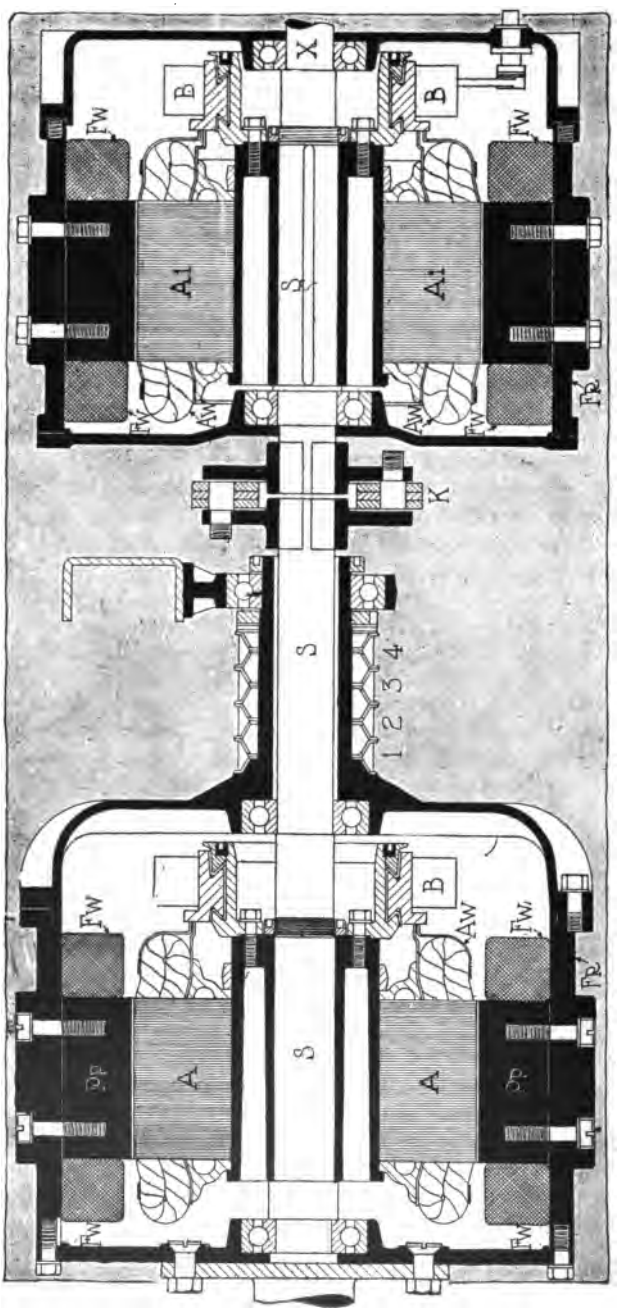

Digitized by Google

increase slightly. The reduction in forward speed is accomplished by making the slippage between the field and armature more; thus on low speed the field may be revolving 1,000 r.p.m. and the armature 250.

The changing of speeds is controlled entirely by a small lever on the steering-wheel. This lever is also used for starting the engine, it being only necessary to move it upward to the starter position. When changing from one speed to another it is moved a little more than an inch. In changing speeds there are no mechanical jumps as in sliding gearsets but one speed works into another imperceptibly.

The electric motor performs some functions in addition to that of assisting the gasoline engine to do its work. It serves as an electric brake, gradually reducing the speed of the car when the controller lever is placed in a neutral position. It also charges the storage battery at a 10 ampere-hour rate when the direct drive is used. There is a still further position of the controller lever which gives a charging rate of 30 amperes, which is useful after the car has been idle for some time or in emergency.

DISCUSSION

J. B. ENTZ:—I have not gone into any argument as to the advantages of electric transmissions in the paper, the purpose of which was to point out the characteristics of electrical transmission systems as they differ in themselves. We all know that transmitting and controlling the power of the gasoline engine electrically has been attempted many times, in Europe particularly, on the Panhard, the Mercedes, the Pieper, and a number of other cars. But this was always with the full conversion of the mechanical power into electrical and then from electrical back to mechanical, involving necessarily heavy and inefficient apparatus, which, where it succeeded at all, suceeded under conditions like those in the operation of bus lines, where the use of the lower speeds was not so much to give high sustained driving effort as ease of starting. This did not really do much more than take the place of a first-class friction clutch which would allow starting on high gear. In the system described the commutating conditions are perfect. The position of the controller with which the car is operated most of the time is the high-speed, as in any car. No electricity is generated externally; sparking is impossible. In the lower speed positions the speed-difference is small as compared to the total. Where we want to increase the torque but little over that of the high speed, we include the motor in the circuit, running with a weak field so that the C. E. M. F. will be low, calling for a small slip in the generator, and doing only a small amount of work.

CHAIRMAN WALL:—Gentlemen, this paper comes at an opportune time, when we are all interested in starting devices and are becoming interested in the electric transmission. I would like to ask Mr. Entz whether the curves he has plotted are from practical data; in other words, whether he assumed a certain basis and then worked out the curves theoretically, or worked them out in practice.

J. B. ENTZ:—They have all been worked out in practice. The complete unit has been on the testing block a number of times. I did not

Digitized by Google

give any actual current values; I simply call one hundred per cent. of current the current which represents the torque of the engine at a certain speed at which maximum horsepower was obtained, and endeavored to show from that starting point the electrical changes necessary in the class of work with which you are all familiar, the dynamo and motor, and the variation if the same machines were used as an electrical transmission. On the high speed practically all the power is transmitted mechanically, and this transmission system is, so far as I know, the only one of thousands of means of speed and power control that have been proposed, which does not depend in some way upon changing the leverage of the system. You can decrease the speed of a conventional automobile by slipping the clutch; the clutch will still transmit the engine torque, but energy is dissipated as heat, which is not only useless but tends to destroy the clutch. If you could utilize the heat energy in driving a heat motor to assist in driving the shaft, you would have the equivalent in the clutch and heat motor of the electric transmission, which always transmits the torque of the engine, while slipping, and by controlling the slippage furnishes electric energy utilized in an electric motor on the driving-shaft, supplying additional torque, with the speed diminished in reverse proportion.

Mr. F. E. Moskovics:—We are all trying to reduce car weight. I would like to ask Mr. Entz in that connection whether he has any data as to the relative weight of the car.

J. B. Entz:—The weight of the complete electric transmission with controller and reverse gear-box is practically the same as that of what it replaces in the ordinary car. It replaces the flywheel, because the generator part of the system acts as a flywheel, also the clutch and mechanical transmission with all their connections and the electric motor for starting.

F. E. Moskovics:—That includes battery weight?

J. B. Entz:—No. In a car with a six-cylinder 4½" by 5" engine, the complete weight of the electric transmission is 450 pounds. Of course, there is some variation; some cars have a light flywheel and some a heavy one. A foreign car with a four-cylinder 3 9/16" by 5½" engine made 63 m.p.h. on the Long Island Motor Parkway. We took out the mechanical transmission and put in the electric transmission. With the battery and starter we added about 150 pounds to the weight of the car. That same car, with the same body and load with four passengers, made 62 m.p.h., charging the battery at the same time.

F. E. Moskovics:—In your plans have you provided for various sizes or diameters of rotating members, so that a designer can retain the characteristics of his engine without having to entirely redesign the job and lose its characteristics by arbitrarily pursuing the lines you have set down?

J. B. Entz:—The last ones we put out are adapted to be bolted to the crankcase. They can be built of various diameters and lengths, but there is a certain combination of length and diameter which gives the best results.

Digitized by Google

HERBERT CHASE:—I would like to ask Mr. Entz whether it would be possible to decrease the weight considerably by using a high-speed engine?

J. B. ENTZ:—Yes. The apparatus is not a power transmission but rather a torque transmission, and a high-speed engine, allowing a greater reduction in the axle, will result in decreased weight. At high speed we have a difference of 50 revolutions between the armature and the field of the generator. That speed-difference may be between 950 and 1,000 or 1,950 and 2.000. The high-speed engine lends itself to reduction in weight of the transmission, the same as of the engine itself.

R. McA. LLOYD:—Mr. Chairman, it is not quite clear to me how this electric transmission drives direct at high speed. As I understand it, all the power of the engine is transmitted through the air-gap, doubtless at some expense of power. It seems to me that one of the inherent disadvantages of almost all electric transmissions of the past, and perhaps of this, is that people are not satisfied alone with torque; they want to use all the power that the motor can develop. If you transmit that power through an air-gap, you have to use electric machinery of large enough capacity to provide for that transmission of energy. You have to have a large enough air-gap area and enough weight of copper and iron in the machine to get that power through to the drive-shaft. The tendency has always been to substitute for the mechanical transmission an electrical transmission too small to do the work in heavy grade-climbing and other severe conditions. It is true that this device has been refined to a point where you can get any torque you want and probably a very easy control for the driver; but it is not clear to me that without using a very large, heavy and expensive motor-generator you can get all the power that you can develop with the engine back to the driving-shaft of the car, without any loss, as stated in this case.

J. B. ENTZ:—It is not claimed that there is no loss. Some electric energy is lost in the resistance of the field coil itself, due to the current passing through the resistance coil. There is the slippage loss, which is five per cent. at an engine speed of 1,500 revolutions per minute, transmitting the full torque of the engine. The slippage loss is less for less torque. The percentage of speed-loss is greater at lower speeds, but because the torque of the engine is transmitted, so to speak, mechanically, except for the slip, the size of the apparatus is very much reduced, compared to what it would be with a regular electric generator. You are all familiar with the ordinary electric dynamometer used nowadays. This electric transmission is nothing but a dynamometer. Instead of putting external resistance in the circuit of that dynamometer it is short-circuited on itself, in which case the engine has to turn only 50 r.p.m. in order that its full torque be transmitted. The only loss is the speed loss. The efficiency of the apparatus on high gear is anywhere from ninety-five to ninety-seven per cent, and at lower speeds as high as ninety-one or ninety-two per cent by actual measurement.

R. McA. LLOYD:—Does it not take some energy to keep the magnet excited?

Digitized by Google

J. B. ENTZ:—A small amount, represented by the speed loss, five per cent. It is just the same as short-circuiting a dynamo. If you short-circuit a dynamo and turn it over very slowly, there is no effort. If you turn it over a little faster, more effort is necessary. At a certain speed the full torque of the engine is required. That represents the loss; the difference in speed of the different members of the generator, necessary to develop the electrical energy to supply the field loss and the armature loss. That loss when delivering full torque is 75 revolutions per minute, by actual measurement. It is a very easy thing to measure.

A. H. EHLE:—With any position of the controller is there external resistance in circuit?

J. B. ENTZ:—Only for the brake system and for the boosting charge position.

The transmission is noiseless, of course, at any speed. It has some other good points which I have not mentioned. The circuit of the controller is never broken; there is no step-to-step contact as in the ordinary electric machine. The controller fingers never arc or spark. The circuit of the generator-motor is always closed on itself. When the generator is at its high speed and acting as a clutch only, it is short-circuited right across the terminals. But the motor, being a series motor, cannot generate running forward. It would kill its field. When the engine starts to run backwards, the fields immediately become excited and the motor acts as an automatic brake or sprag.

J. O. HEINZE:—How long could you run this electric transmission at maximum load?

J. B. ENTZ:—It will transmit the maximum horsepower of the engine continuously.

J. O. HEINZE:—What would be the temperature rise of the machine?

J. B. ENTZ:—The temperature rise would be such that you could put your hand on the commutators and coils; a temperature less than that of the crankcase of the engine.

J. O. HEINZE:—If you were to use the electric transmission as a generator and for power work, what horsepower size would it be considered, the running temperature being 150° F.?

J. B. ENTZ:—You can hardly make the comparison, for this reason: any system of any kind that has been brought to a stage of perfection, has been so brought by studying its own characteristics You have to compare each that has been brought to its point of highest efficiency. With an ordinary electric generator we will say we want to transmit 42 horsepower with an engine, assuming 1,500 revolutions per minute. The armature being turned by the engine would have to turn 1,500 revolutions per minute different from its field. Under these conditions we have losses due to differences in speed, called core losses. These core losses, particularly in high-speed machines, are very often more than the resistance losses. Using that same machine as a clutch, as in the electric transmission, it is run at a speed of only 50 revolutions per minute. There are absolutely no core losses, and very much better heat dissipation, because the field revolves. The total losses are much smaller.

Digitized by Google

J. O. HEINZE:—What is the weight of the electrical portion of the transmission?

J. B. ENTZ:—The armatures weigh about 80 pounds each. They are 8½" in diameter and 5" long. The field magnets weigh 120 to 130 pounds. The machines are of the six-pole type. They transmit the full torque of the current, which is represented by 120 amperes. With the car we have here the voltage with full field strength at 1,000 revolutions per minute speed-difference, with maximum torque, would be 235 volts.

J. O. HEINZE:—While I am perfectly willing to admit that the electric transmission will carry a large overload for a short time, I, nevertheless, question whether a continuous overload, which you are bound to have in a machine of such small dimensions, will not produce excessive temperature in the same.

J. B. ENTZ:—I have been designing dynamo-electric machines for twenty-five years and have studied the design, particularly with reference to weight. I have been able to make a machine considerably lighter than the ordinary generator and motor which run at full speed-difference, and have commutating problems and losses which do not exist in this case. The machine has been thoroughly tested out on thousands of miles of road and will stand the full horsepower of the engine with wide-open throttle, continuously. It would not do so continuously on the lowest speed position with the motor armature with two windings, which were connected in series, but it served every use I could put it to. It was not until I got to the Alleghanies and found a grade seven miles long that I found there were limitations in that connection governing the size of the apparatus. So I changed to a full single winding on the armature, which arrangement will stand the full horsepower continuously, and more, as far as temperature rise is concerned. Additional temperature rise means additional energy loss. I have kept down the temperature, not only to avoid destruction, but to keep up the efficiency.

BRUCE FORD:—In the case of a fifty-horsepower engine transmitting its full power, and the relation of that fifty horsepower to the horsepower of the transmitting means, is it not true that the power to be transmitted is simply proportionate to the slip; if the slip is five per cent., the actual electrical power to be transmitted through the device is only two and a half horsepower?

J. B. ENTZ:—The only energy converted from mechanical to electrical on the high-speed position is the 2½ horsepower. Under those conditions the full torque of the engine is transmitted to the wheels. The electrical work that the clutch-generator has to do is no greater when the engine is run at 2,000 revolutions per minute and its armature 1,950, than if the same field magnet were run at 50 revolutions and the armature were stationary. Under these conditions the core losses are nothing. Any frictional loss which might exist would only be transmitted mechanically instead of electrically.

J. O. HEINZE:—If I understood it correctly, if the engine develops 50 horsepower, the real estimated power transmitted to the propeller-shaft is 47½; 50 less the 2½ horsepower loss in the transmission.

Digitized by Google

J. B. ENTZ:—With wide-open throttle, yes.

J. O. HEINZE:—The question of temperature is the one element in which I am chiefly interested. I do not know of any machine, made of any such size, developing 48 horsepower, with proportional dimensions, that would not get very hot.

J. B. ENTZ:—I believe it would not be possible if 48 horsepower were converted into electrical energy by a dynamo run continuously.

F. E. MOSKOVICS:—Is it not a fact that the slippage is always a constant factor, irrespective of the speed?

J. B. ENTZ:—It is dependent on the torque transmitted. In other words, if the torque of the engine is 200 foot-pounds and the slippage is 50 revolutions per minute, it is less than 50 when the torque is less than 200; but whether it is running at 100 or 500 revolutions per minute, there is no difference.

J. O. HEINZE:—I am perfectly satisfied that the core losses have been minimized to practically nothing, but I am not satisfied that the C^2R losses have been entirely minimized. I am willing to admit that, under normal conditions, the electrical transmission will perhaps do satisfactory work. But I still believe that one of these cars on the Indianapolis Speedway, with 50 horsepower going through the transmission, would get exceptionally hot.

WILLIAM H. PALMER, JR.:—Is not part of the difficulty due to the fact that when we say electrical transmission we usually think of an electrical transmission system in which the energy is changed from mechanical energy to electrical energy and then back again? The difference, it seems to me, in Mr. Entz's system is that it is not an electrical transmission system in that sense. Under high-speed conditions he has more nearly an electrical torque transmission system. That is, he is simply transmitting torque and is not under the necessity of changing mechanical energy to electrical energy and back again. So that the work done by the electrical unit is of an entirely different character. The unit under high car speed conditions is simply an electrical clutch.

J. B. ENTZ:—That is not strictly true. We have an electric generator, if you choose to call it so, and a certain amount of current through its armature winding and field winding gives a certain effort between its parts; one tends to turn on the other. If this effort is 200 foot-pounds, the current may be 100 amperes, depending on the winding; a certain current through the windings represents a certain effort, the same as a certain current through an electro-magnet represents a certain pull. If we want to use that machine as a generator in the ordinary sense we drive one member in relation to the other. In so doing we have certain losses. Some of these are analagous to frictional losses. They are what are called core losses, the result of currents induced in the mass of the armature, which do not flow to the outside circuit, and are not useful. I have assumed the core losses in this generator to be five per cent. at 1,500 revolutions per minute. When that same machine is used without generating any external voltage, those core losses do not exist. Half the

Digitized by Google

losses which would otherwise appear as heat are saved at once. The other losses. the C^2R losses, are the same for the same current; there is no doubt about that. The temperature rise, however, is less, from the fact that the full frame is revolving and on that account much better ventilated. The unit, being used by itself. presents not only smaller energy loss in itself, through the elimination of core losses, but entirely dispenses with the losses in the motor.

At lower speeds the voltage that has to be developed is greater, but the speed-difference is always the difference between the engine speed and the driving-shaft speed, and because that is always lower, the core losses are lower. As the result of some eight years' experience. in which seven or eight distinct models have been built and thoroughly tested out, the apparatus has been brought to its final form and will transmit the full power of the engine continuously without overheating or detriment to its windings or insulation.

C. O. SNYDER:—I would like to ask how much current is generated at high car speed, say fifty miles an hour, assuming 50 horsepower is being delivered to the rear axle.

J. B. ENTZ:—The engine of the car which we have here has a maximum torque of 200 foot-pounds, at 1000 r.p.m.; equal to 38 horsepower. The generator is so wound that it takes 120 amperes in its circuit to transmit this torque. If this torque were transmitted at a speed-difference of 1000 r.p.m. between the armature and field, the voltage would be 235. 235 times 120 equals 28,000 watts or 38 horsepower. If, however, we were on the high speed with the engine running at 1000 r.p.m. and developing 200 foot-pounds torque, and the driving-shaft running at 950 the current would still be 120, but the voltage generated would be five per cent. of 235 or 12 volts. This would not appear externally as the generator is short-circuited across its terminals, but constitutes the drop in the windings.

W. H. PALMER, JR.:—When running at high speeds with the generator short-circuited, what is the current in amperes circulating through these windings?

J. B. ENTZ:—It is different in different sized machines. It makes no difference whether there are 200 amperes circulating in the windings, representing a certain number of volts at a certain speed, or some other number of volts and amperes. In other words, a certain number of kilowatts represents a certain horsepower.

C. O. SNYDER:—At that high speed what would the voltage be when you are using 125 amperes?

J. B. ENTZ:—At high speed there is no external voltage.

C. O. SNYDER:—If there is a slip of 50 revolutions there must be some internal voltage.

J. B. ENTZ:—It is entirely dropped in the winding. There must be a speed-difference to overcome the full resistance of the winding, but there must be an internal loss. The speed difference is sufficient to overcome the internal resistance of the generator itself, but it is generating no external voltage.

Digitized by Google

C. O. SNYDER:—When you have a short-circuit you must have voltage before a current will flow.

J. B. ENTZ:—Exactly; you can short-circuit a battery and have no external voltage but a very heavy current.

C. O. SNYDER:—What are the voltage and current flowing? That would show the electrical horsepower acually being used in the machine.

J. B. ENTZ:—That would depend upon the resistance. For instance, if you measure 100 amperes in the short-circuit and the resistance were .10 ohm. you would know the loss was a kilowatt.

C. O. SNYDER:—I have not been able to ascertain the quantity of energy transformed from mechanical to electrical inside the machine and then transformed back again.

J. B. ENTZ:—There is none except in the case of the slippage at high speed.

C. O. SNYDER:—What amount of energy is that?

J. B. ENTZ:—The electrical energy which corresponds to the 2½ horsepower in this particular assumption. At 1,500 revolutions per minute, transmitting the maximum torque of which the engine is capable, that represents about 2 kilowatts; that is energy loss and heat loss, but that does not cause external energy.

C. O. SNYDER:—That amounts to the fact that you are converting 2½ horsepower from mechanical into electrical energy and back to mechanical?

J. B. ENTZ:—It is dissipated as heat.

C. O. SNYDER:—You are losing that in creating the electrical field which transmits the torque?

J. B. ENTZ:—Yes, but it does not represent any transmitted energy.

H. L. TOWLE:—I think that the action of this system can be stated in a very simple way. The discussion has indicated that some of the members are under the impression that in order to transmit the power from the engine to the rear axle, it is necessary that the generator transform the whole energy developed by the engine into electrical energy, which would result in the necessity of dissipating a correspondingly large amount of heat. As a matter of fact, when the car is traveling at full speed, as Mr. Entz has pointed out, the electrical energy developed is only that required to produce between the field and armature of the short-circuited generator a certain magnetic drag. Mr. Entz has found that this energy is practically five per cent. of that developed by the engine. Under those conditions, taking the horsepower of the engine as 50, the generator would have to be only a 2½ horsepower electrical machine to transmit that power. Of course, it actually has to be larger in order to get the necessary iron masses to develop the magnetic pull. But still, in theory, it is acting as a two and one-half horsepower dynamo instead of as a forty-eight- or fifty-horsepower dynamo. The reason that it can be small and still dissipate this heat is that it is converting only that small amount of energy (2½ horsepower) from mechanical into electrical energy and thus into heat. The time when the machine will be taxed to get rid of its heat will be when the car is pulling hard and the

Digitized by Google

generator armature is running considerably more slowly than the engine, so that it has to develop a correspondingly greater amount of electrical energy for delivery to the motor; in other words, when the torque required to drive the car is greater than the torque exerted by the engine. The heat to be dissipated is at its least when the car is traveling fast on a level road, with the engine developing its full power and the slip at its minimum.

F. E. MOSKOVICS:—Mr. Entz said 450 pounds is the weight of the unit in the car he has here, and that this is the approximate weight of what he replaces.

J. B. ENTZ:—The car has a six-cylinder 4″ x 5½″ motor.

F. E. MOSKOVICS:—I am familiar with a car of larger power than that, in which the weight of the lighting and starting equipments, battery, flywheel, clutch, shifting gears, universal joints and small parts, is under 285 pounds.

J. B. ENTZ:—285 pounds for flywheel, clutch, shifting parts, gear transmission and electric starter?

F. E. MOSKOVICS:—And battery and generator.

J. B. ENTZ:—What does the flywheel weigh?

F. E. MOSKOVICS:—65 pounds.

J. B. ENTZ:—Leaving the remainder 220?

F. E. MOSKOVICS:—The transmission weighed 80.

J. B. ENTZ:—That is very much lighter assembly than I know of. I have weighed a considerable number of them.

F. E. MOSKOVICS:—The shifting levers are figured at 20 pounds.

R. McA. LLOYD:—I did not mean anything in my comment as a reflection on this system, because I believe there are advantages in it which have not come out this afternoon. I arose in the first place to point out that there is some loss when driving on high speed, and that it is not correct to state that the direct drive is without loss—a statement which I have heard a number of times in connection with this system. In almost every other effort to substitute an electric or magnetic transmission for a mechanical one, the developers have failed to put in large enough units to really transmit the power at all times, but probably Mr. Entz has satisfied us that he has large enough magnetic masses in his mechanism to do the work.

J. B. ENTZ:—I have never claimed that there is no loss. Some in speaking of the transmission have used the expression "direct drive," and perhaps assumed there was no loss. There is loss which appears as a speed loss. But we have eliminated certain frictional losses which compensate for that. Moreover, as far as the gas engine goes, its characteristic is such that the speed loss is much more favorable to its full power development than the frictional loss would be. The maximum torque of the gas engine is obtained at anywhere from 400 to 1,000 revolutions per minute. You are handicapped very often in approaching a grade by the fact that you cannot rush it. At a speed corresponding to 800 or 900 revolutions per minute of the engine, you could exert more torque and

Digitized by Google

go up better than if held down to twelve or fifteen miles an hour by traffic. The effect of that speed loss means that the engine is running so much faster and not the car so much slower. Taking two cars approaching a grade at twelve or fifteen miles an hour, the gas-electric car will take the grade running faster than the mechanically connected car. It will continue to exert more torque until it gets to the point of maximum torque. Side by side with other cars, it will get away better at high speed, even without regard to its control. It is only when you get to what you may say is the maximum speed of the engine that the speed-loss becomes a factor, and even then it is smaller in performance in miles per hour than the amount of slip would indicate, because the falling off of speed of a car itself reduces the tractive effort necessary. If you will look at the set of curves given in the paper, you will see that I have extended in dotted lines the speed curves of both the generator-motor system and the electric transmission system to points where they meet the resistance curve of the vehicle. The actual result is that the engine goes about two per cent. faster and the car about two per cent. slower than it would otherwise if at that time it had exactly the same drag on it. But I find that there are drags in gear-boxes due to the use of heavy greases and oils and worn gears that more than compensate for this.

Contributed by R. M. Gaston

A car I built and tested was operated by a twenty-horsepower engine direct connected to a generator. The car was propelled by a single motor. The controller consisted of a reversing switch, operated by a handle on the steering-post, connecting the generator field with a storage battery through several steps of resistance. The car was designed to carry five passengers and weighed about 3,400 pounds, including 150 pounds of iron-clad battery. It had no clutches and no gear-changing devices.

The battery was sufficient to provide satisfactory starting by using the generator as a motor, and was also used for ignition and lighting. The generator was ordinarily operated with full constant field and the voltage was varied by changing the engine speed, which resulted in very satisfactory control.

The attractive features of the operation of this car were the entire absence of gear-shifting and the smooth starting. The engine could be raced before the switch was closed, without any danger of a jerky start. When running on a level the car took 90 to 110 amperes and the speed was almost proportional to the voltage. The voltage range was from 10 to 60. The charging of the ten battery cells was effected through automatic relays and ballast resistances, when operating at moderate speeds.

An equipment of this type provides an elastic drive having no fixed ratio between engine speed and car speed, whatever the load. The driver experiences a very pleasing sensation in reaching a grade; on opening the throttle the car slows down and the engine speeds up automatically

Digitized by Google

without requiring any effort to shift gears. Also, when going down an incline a very slow engine speed will give a high car speed.

The tests of this machine showed clearly that such an electric transmission would not be desirable on a racing car, but entirely feasible on large cars such as buses or heavy trucks at moderate speed, especially when the hill-climbing requirements are not severe. When climbing hills which approach the capacity of an equipment of this type, the copper loss is enormous and will approach one hundred per cent. of the engine output at the stalling point, but still allow the engine to operate at an efficient speed. This condition is improved only slightly by using some form of electric slipping clutch which generates current for an auxiliary motor.

STARTING, LIGHTING AND IGNITION DEVICES

By Albion D. Libby

(Member of the Society)

It would be impossible to treat in one paper any one of the sections of the above subject and do it justice; consequently it is not the object of this paper to discuss in detail each section thereof, but rather to state a problem, which includes the three sections, and then to offer a solution therefor. As units by themselves, each section involves its own problems, but when united on an automobile or other moving vehicle they become interlocking and hence in the general problem must be treated together.

The general problem may be stated in the following terms: The car must be cranked fast enough to secure carburetion under varying conditions of weather and fuel. The ignition devices must operate below the cranking speed and the lighting device must operate to light the car and furnish power for the cranking device.

We must show, first and foremost, reliability which means durability; second, simplicity; third, as low cost as possible without sacrificing reliability; fourth, as light weight as possible.

VOLTAGE

In the development of the starting and lighting system described particularly in this paper, a great deal of time and study was given to all existing systems in the United States and foreign countries. After the

Digitized by Google

investigations it was decided to adopt a system based on the use of a six-cell storage battery, giving a 12-volt system. The basis in working out the general problem is the voltage of the storage battery to be used. In the early days of the internal combustion engine, the first battery-ignition systems used were primary wet cells, later replaced by dry cells. Six volts was the pressure commonly used in these early ignition systems. After a while the dry batteries were discarded and a small storage battery consisting of three cells, giving approximately the same voltage as the dry cells, was substituted. Under these conditions the storage battery had to be removed from the car at intervals for the purpose of charging. At a later period some added electric lights to the car, the current being taken from the storage battery used for ignition purposes, or in some cases an extra battery of the same voltage as the ignition battery. During this period also the batteries had to be removed for the purpose of charging. This became tiresome; the car owner began to inquire for a small generator with which he could charge the batteries while running the car. Finally he asked for an electric motor to crank the car, the motor to be driven from the batteries which he had already installed. Thus we see that the six-volt system is the result of a great deal of patchwork; while a great many of the rough edges have been knocked off, yet it is the belief of the writer that it never has been an entirely satisfactory job, and probably never will be; that is, it cannot be made as satisfactory as a 12-volt system.

In view of the fact that the whole state of the starting and lighting and ignition art has grown up around the six-volt battery, the lamp bulb has become standardized for this voltage to such an extent that the adoption of any other voltage necessarily raises the question of the present increased cost of the higher voltage bulbs. This is a question of demand. We all know that special products break up the general manufacturing routine and increase the cost of production. In order, therefore, to use voltages higher than 6, such as 18 or 24, as are being used to a small extent, it has been necessary to introduce more or less complicated controllers in order to throw the cells in series for starting purposes and in multiple for lighting. Operating batteries in multiple is open to a number of objections which are no doubt familiar to many of you. It does not seem wise to introduce controllers or apparatus for switching the cell combinations into their various relationships; that is, we should have "simplicity." Six-volt systems, on account of the heavy currents carried, necessitate larger conductors for the wiring as well as more generous design in the starting motor and lighting generator; and are more susceptible to bad contacts at the commutator brushes and elsewhere than the higher voltage systems. It seems to me that 12 volts is a satisfactory mean between the extremely low voltage of 6 and the higher 24. The 12-volt system has all the simplicity of the 6 without the complications of the 18 and 24, and it has the "punch" necessary to make a starting motor "wake up" to its job of cranking the engine. It is possible to crank an engine with a 12-volt battery of half the ampere-hour capacity

Digitized by Google

of the six-volt battery, even when the voltage across the starting motor brushes falls as low as six, while under the same conditions the six-volt system will fail at half the percentage of voltage drop. This will be found to be a valuable asset on many occasions. It is worthy of note that practically all European cars are built for 12 volts.

SINGLE OR DOUBLE UNIT

Much consideration was given the question of one or two units for starting and lighting. It seems that there should not be any question as to the ignition being kept separate from the other units. Two units avoid many complications in wiring, internal and external, and give the greatest reliability possible, as well as simplicity and maximum efficiency at a low cost. The units, being separate and distinct, can be installed on the car, in a great many cases, much more readily than the larger single unit; and if, for any reason, one of these units gives out, the other can be operated. The work required of the starting motor and lighting generator are diametrically opposite; consequently their characteristics are opposite to a very pronounced degree. The starting motor must be of a series type, while the lighting generator must have the characteristics of a shunt machine. It is a difficult problem to combine these two characteristics in one machine and get the same efficiency per pound out of the combination as can be obtained individually from the two separate units.

CLUTCH

On account of the characteristics of a gasoline engine in starting, the requirements put on to the starting motor are extraordinary and the device used for making the connection between the starting motor and the engine in order that the engine may be connected and disconnected therefrom, must be a high-grade piece of apparatus. I consider, therefore, the clutch used for this work to be the most important part of the starting system.

I have never seen any friction, ball or roller clutch that would stand up over a long period of time under the strains produced in cranking an engine. When the engine is coming up to compression a steady strain is put on the clutch, but as soon as the point of compression is passed the moving part of the engine "runs away" from the clutch and there is a short interval of time before the clutch catches again. These continual blows will inevitably flatten any ball or roller that can be made, and as soon as they are worn flat the clutch begins to slip or stick. The clutch which will be described is free from these defects and so far as rigid tests extending over a year's time can show, no weakness has been discovered in the mechanism. After fifteen thousand engine starts on one of these clutches it appeared to be just as good as it was when the first start was taken.

Fig 1 shows an end view of the clutch with a portion broken away. Fig. 2 is a section of Fig. 1. In this particular clutch one of the clutch members *3*, which is adapted to be keyed to the crankshaft, carries a

Digitized by Google

Fig. 2

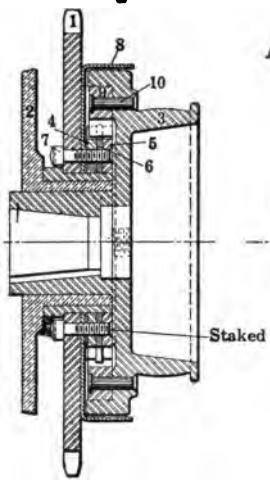

Fig. 1

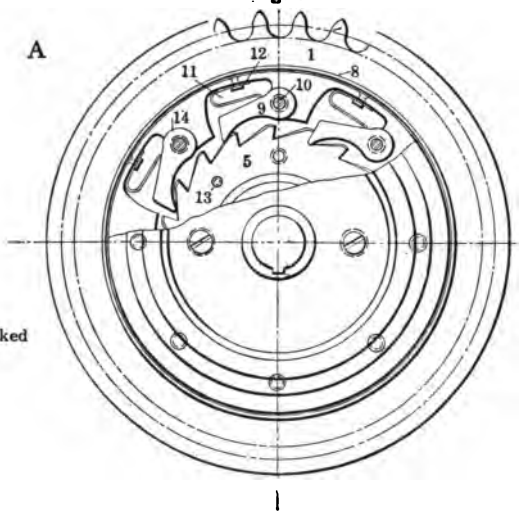

flange for receiving the fan-belt; this particular construction to accommodate the fan-belt may or may not be used. Rigidly attached to this part are pins *10*, which carry pawls *9*. Resting on the pawls *9* are light springs *11* for the purpose of preventing any vibration of the pawls. The other element of the clutch consists of a ratchet element made up of three parts, *4*, *5* and *6*; *4* and *5* are steel, while *6* is a member whose function will be described later. These three parts are riveted together and the whole bolted to the sprocket wheel *1*, a casing *8* being used to enclose the pawl and ratchet elements to keep out dirt, etc., *2* represents the end of the gear-case on the engine which carries a hub that serves as a bearing for the driving member. The pawls and ratchets are so arranged that when the car is standing idle there will always be one of the pawls *never* farther than .089 of an inch from engagement, with an 8-pawl element; consequently there is no shock at the moment of engagement or at the time of going over compression. When current is applied to the starting motor the driving member carrying the ratchets, one of which is in engagement with one of the pawls, begins to turn the pawl-carrying element, which is keyed to the crankshaft. When the engine picks up of its own power the pawls are thrown back into the recesses provided and out of engagement with the ratchet-wheel, and will stay there until the car is stopped, when they are returned to position by the springs *11*. However, to overcome any possibility of the pawls dropping down and making a noise, when driving at a very low speed on direct drive, the noise-killing element *6* is introduced for the purpose of receiving the pawls as they drop down into position. The mounting of pawls *9* on pins *10* is such that no strain is put on the pins *10*, the strain being carried by

Digitized by Google

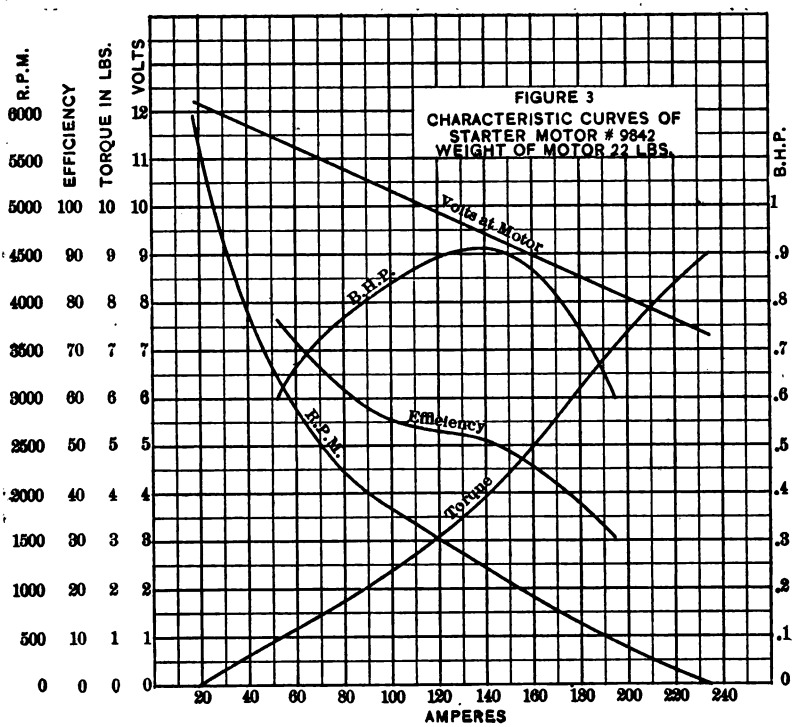

the abutment back of the pawl. It is seen that the driving member is idle while the engine is running.

Fig. 3 shows the characteristic curves of a small-size starting motor used in the system. Fig. 4 shows the application of a starting motor and clutch to a six-cylinder Winton car. The curves shown in Fig. 3 were taken from this particular motor.

STARTING-MOTOR DRIVE

Attention is here called to the necessity of getting a direct drive for the starting motor to the crankshaft of the engine. I have seen an astonishing increase in the amount of power taken, by an indirect application of a starting motor on account of the engine design being such as to accommodate the starting motor only at one place so that it might look out of the way. Where the drive is short and direct, as indicated in Fig. 4, the loss of power in the reducing gear is very small.

GEAR RATIO

The best gear ratio for one make of car may not be the best for another. It is my belief that a four-cylinder engine should be cranked at from 100 to 135 r.p.m. in order to take care of varying conditions previously pointed out. It seems to me that anything beyond 135 r.p.m.

Digitized by Google

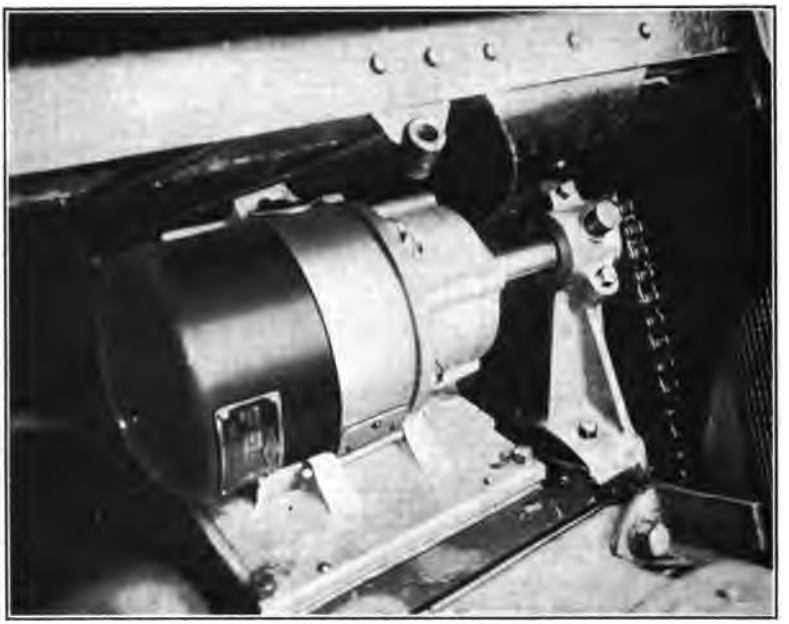

Fig. 4.

is a waste of power; if the engine does not start at this speed something is wrong. The general rule should be to crank the engine fast enough to get carburetion under varying conditions and have a good factor of safety by the expenditure of the least amount of power. On a certain installation with a gear ratio between the starter and the crankshaft of 25.12, the initial current was 120 amperes, and the running current 60, the voltage being 10.6. Under these conditions the engine was cranked at 120 r.p.m. The same engine was cranked at 177 r.p.m. by changing the gear ratio to 16.9, the initial starting current being 135, and 70 while running. These figures merely indicate that it is best to do a little experimenting on any installation before deciding on the gear ratio to be adopted.

LIGHTING

In the November, 1913, issue of the Proceedings of the American Institute of Electrical Engineers, A. E. Waller presented a very interesting and valuable paper covering various features involved in the lighting of a motor car. He treated to some extent the different types of lighting generators and the method of connection to the engine. In general, the installation of the generator has become a comparatively simple problem and will not be touched upon here other than to show one or two examples.

The lighting generator must work automatically; that is, it must be

Digitized by Google

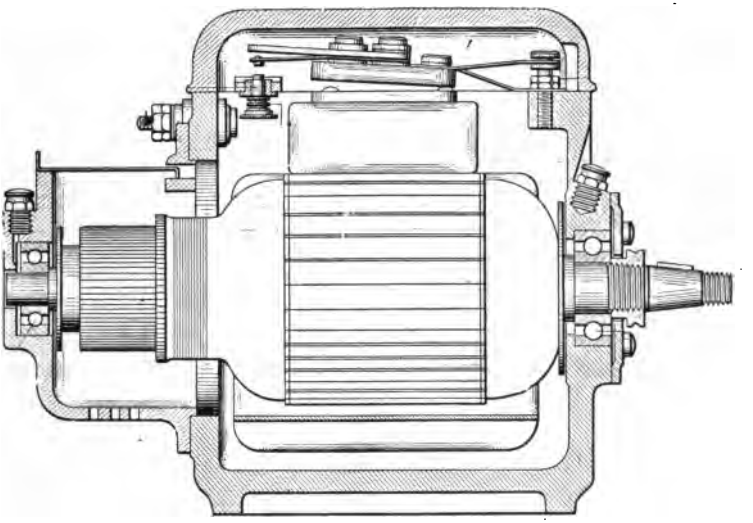

Fig. 5.

automatically connected to the battery at the proper car speed and must also be automatically disconnected from the battery when the speed of the car is decreased to a point where the battery and dynamo voltages are balanced. The dynamo must be self-regulating so that the charging current cannot exceed a certain predetermined point, and this regulation should be accomplished by a minimum number of parts practically indestructible and independent of external influences. The battery should have plates of such size as will take the maximum charging rate of the dynamo for a long period of time without detriment. Having a battery and generator with these characteristics it should be impossible to injure them by driving at a high rate of speed for a number of hours during the day time. In a new type of lighting generator in which the armature is supported on the usual ball bearings, the field poles have extensions which carry coils for the purpose of aiding in the regulation. Extending across the polar projections is a keeper supported by a good substantial spring, and associated with this is a spring used for the purpose of adjusting the tension on the first-mentioned spring. The circuit to the battery is closed by the action of the keeper when it is drawn toward the pole tips under the influence of the magnetic flux therein. The coils around the polar extensions are wired in series with the armature. When the current in the armature reaches a certain predetermined value, the keeper is drawn all the way down and an auxiliary contact is opened, cutting in a resistance with the shunt winding, reducing the flux due to the shunt windings, and this, together with the differential action of the series coils on the polar extensions reduces the magnetic flux through the armature to such a value that the current to the battery does not

Digitized by Google

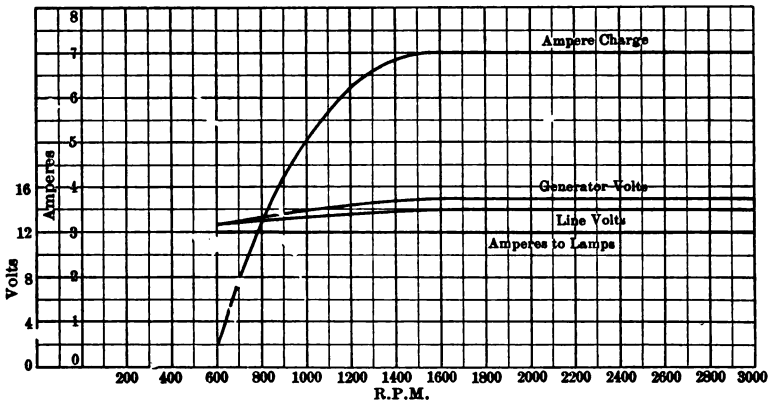

Fig. 6.

increase beyond a certain value, no matter how fast the armature is turned. The reverse operation of the controller takes place as the speed diminishes. A sectional view of the machine with the cover removed is shown in Fig. 5. The performance of this machine is illustrated in Fig. 6, from which it will be noted that the high-speed cut-out comes into action at the speed of about 1500 r.p.m. At this speed the current is 7 amperes, which is considered a maximum charging rate for a 60-ampere-hour, 12-volt battery. This particular generator is designed to run at twice crankshaft speed, and when installed on a car geared 3.7 to 1, with a 34-inch wheel, begins to charge the battery at about 7 miles per hour. The high-speed control comes in between 35 and 40 miles per hour, the lamp load being carried at about 17 miles per hour.

A number of tests have been made on this system to determine how long it would take to build up the battery (50 A.H. capacity) after having thoroughly discharged it by running around city streets, carrying the entire lamp load, and operating from two to three hours each evening. It was found that within a week's time the battery was back to its normal gravity and voltage. Attention is called to the fact that the entire controlling mechanism for the generator is contained within its housing and but one pair of wires need be run from the generator to the battery. When the cover is taken off by removal of two screws the controller and main-line contact are within plain sight and easy access. This machine is entirely self-controlling and the movable element is independent of dash-pots, liquids, frictional devices, pivots, oil, grease, graphite and centrifugal devices, and is substantially independent of gravity and shocks on the road. The regulator is not subject to wear except at the contact points, and therefore does not require any adjustment other than that provided in order that one who drives very little during the evening may set the regulator so that the maximum current will not run above 5 to 6 amperes. The control of the machine is such that a short-circuit across the brushes will not injure the machine.

Digitized by Google

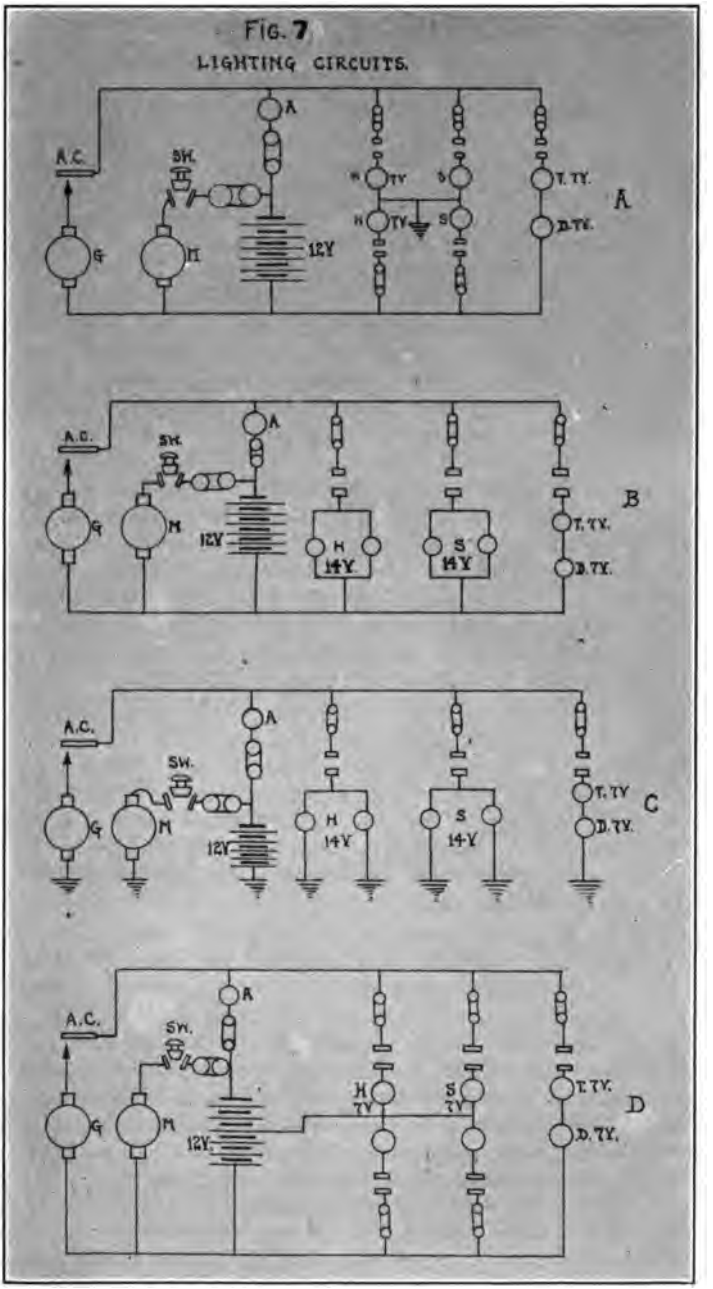

Digitized by Google

WIRING

Fig. 7 illustrates four circuit arrangements which may be used. In the arrangement marked *A* the head lamps are 7-volt and wired in series, using grounded sockets and being controlled by a double-pole single-throw switch. The same arrangement is used for the side lamps, while the tail and dash lamps have metallic sockets wired in series, using 7-volt lamps. It will be noted that with this arrangement there is no change in the lamp bulbs or sockets now used with a 7-volt grounded system, the only addition being a double pole on the switch and one extra fuse, two being used in each of said circuits. A fuse is also shown in the main line leading to an ammeter. A fuse is also shown leading to the starting switch. *G* is the generator and *A C* represents the automatic cut-out contained within the generator itself as has been described. The question of starting-fuses will be referred to later. The fuses for the starting circuit as well as the lighting and generator circuit should both be placed as close to the battery as possible. Circuit *B* uses 14-volt lamps for the head and side, metallic sockets being used throughout. The circuit arrangement *C* uses 14-volt lamps for the head and side, but a grounded system is indicated throughout. Circuit *D* provides for 7-volt lamps throughout, the head and side lamps being wired to a neutral connected to the center of a 12-volt battery. As mentioned in the first part of this paper *practically* the only objection to the use of a 12-volt system at the present time lies in the fact that 14-volt bulbs are more expensive than the 7. All the lamp bulb manufacturer needs is an order large enough to make production an item in order to reduce the cost.

I note that the Electrical Equipment Division of the Society has recommended a single-wire grounded system. I feel that this is a mistake, particularly as no more attention to protecting the battery leads is given than is now in vogue. I have seen recently a new car within a hair's breadth of burning up on account of being wired for a grounded system, one of the battery conductors encased in a flexible conduit becoming crossed with the sheath which was grounded to the frame of the car. The result of this was to melt the flexible metallic sheath until it ran like molten lead. The heat set fire to another piece of apparatus in the dash close to an auxiliary gasoline tank and only quick action saved the car.

I notice that in Mr. Davis' article on the "Ideal Car" he states that his car should give 8 years of satisfactory service. It is beyond belief that any one will drive a car for 8 years without some wire connected in the starting or lighting system becoming grounded, and I ask in all seriousness what is going to happen should this ground come on the main battery lead to the starting motor, generator or lighting bus-bar? Something is bound to happen. The car owner may be fortunate enough to get off with a burnt-off battery lead but may encounter something more damaging. By the use of a metallic wire system one has two chances and it is only a matter of five or ten minutes to have the car tested for

Digitized by Google

grounds at intervals of every three or four months. Suppose a car were wired with circuit *A* of Fig. 7; should a ground occur on one of the battery leads leading say to the positive side of the battery, the head- and side-lamps connected to this side of the battery would be shunted out, and if one of the lighting switches were pushed the full voltage of the battery would be thrown across the lamps. The fuses connected in this lamp circuit should be of such a size as to take care of this increased flow of current but, supposing for the sake of argument, they did not, the worst that could happen would be the probable burning out of the lamp connected to the negative side of the battery. This would be far better than the loss of the entire car which might happen, should a ground come on one of the main battery leads of circuit *C* without a fuse close to the battery as is now the practice. It might be argued that if circuit *C* is used, a car owner should have his car periodically tested for grounds, but while we might reasonably expect him to do this, the chances are that he would not, and for that reason it seems to me it is preferable to give him *two* chances instead of one. One objection which may be raised against the use of circuit *A* is the use of double-pole switches and double fuses. The function of the latter has already been pointed out. If single-pole switches were used the lamps would be subject to unbalanced conditions; for example, suppose the head lamp switch was in the "off" position, and the side lamp switch in the "on" position; then the one side lamp would be way above normal candlepower, and the other way below, and one head lamp would be dimly lighted. Double-pole switches should be used with this circuit, which is suggested as a means of using 7-volt bulbs with grounded sockets. With all the objections pointed out it is a safer circuit than *C* without the fuses as shown. Some of the objections raised against circuit *A* may be cited against *D*, and in addition there is some tendency to unbalance the battery if different candlepower lamps are used, but experience with this circuit and generator mentioned above shows that this objection has no weight because the battery is kept properly charged. It seems to me that circuit *B* is the right circuit to use on the "Ideal Car."

Up to the present time practically no attention has been paid to the question of fusing the battery lead running to the starting motor. I submit that this should be done for the same reason as has been set forth for fusing the battery lead running to the lamps. I have seen starting motors become grounded at the brush holders. When such an accident does occur then on account of the large leads used in this circuit an extremely heavy current flowing through the grounded section is very apt to start some fireworks. Only a short time ago a case of this kind did occur; a bolt head on the framework of the car wearing through the protecting cover of the cable of the starting battery lead, grounding the wire and the heavy current flowing over the wire melting the insulation off so that volumes of smoke were pouring from the car. Quick action in removing the battery lead from the battery took care of the trouble.

I have used the following specification for a starting fuse for a 12-volt

Digitized by Google

system with excellent results. I do not give it, however, as a final result:

1—The starting-fuse must stand instantaneous flashes of 300 amperes.

2—It must carry 175 amperes for 5 minutes.

3—It must blow at 225 amperes cold, without having been previously heated, in 15 seconds.

Such a fuse can be made very cheaply, and it seems to me is a necessary adjunct in the proper wiring of the car.

INDICATOR

I do not believe any car-lighting system is complete without an indicator in the charging and discharge circuits which will show accurately what is taking place within these circuits. An off and on indicator may show that the dynamo is connected to the battery but something may be wrong, and only a small part of the current that should be in the circuit may be flowing and the driver have absolutely no knowledge of what is going on. I believe every car should be equipped with a suitable ammeter as indicated by *A* in the various circuit arrangements shown in Fig. 7. In instruments used on automobiles it is essential that they be of such construction that the violent jarring due to vibrations of the dashboard will not affect them as regards accuracy or mechanical stability. It is commonly found that the vibration of the dashboard will cause parts to work loose if these are not properly designed or securely fastened. Here again reliability and simplicity are the key-notes. The vibrations of the dashboard will also affect the operating characteristics of the instrument in that they produce vibrations of the pointer, thereby making it difficult to obtain a reading. These vibrations may be in synchronism with those of the dashboard or they may be irregular due to the controlling springs of the instrument oscillating back and forth or up and down as the case may be, on account of the springs as ordinarily used being rather long and comparatively weak. As is well known, the deflection of an indicating instrument of the permanent-magnet type is produced by the current passing through a movable coil pivoted so that it can swing in a magnetic field, the force thus produced by the coil being opposed by the previously mentioned springs. The moving coil circuit is capable of taking a certain number of turns and a certain amount of current, depending upon the potential applied to the moving coil which in an ammeter is the same as the potential across the shunt. It is evident that the stronger the springs are the more definite and more rapid will be the indication of the instrument. The rapid action of the moving system will serve as an indication of variable contacts due to loose connections, etc. A sluggishly moving system whereof the moment of inertia is great would not indicate these defects, or at least only to a very small degree. It is also important to make the moving system light, but not so light that it will suffer in mechanical stability, which is a very important feature in an instrument mounted in the dashboard as it is likely to meet with violent abuse in garages during repairs to the engine. While in an ordinary instrument the lines of force enter and leave the moving coil horizon-

Digitized by Google

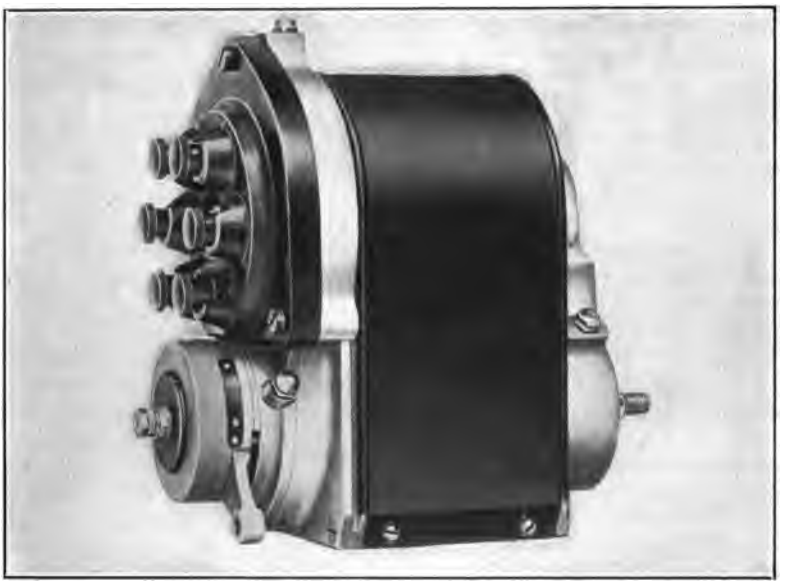

Fig. 8.

tally, acting only on the two vertical sides of the coil, the lines of force in a recently developed instrument enter the moving coil on all sides of the same, thereby rendering its action more effective; first, by gathering in the stray lines of force; secondly, by utilizing every unit length of the coil winding whereby the efficiency is greatly increased over that of ordinary instruments. This results in a strong torque which enables the use of strong controlling springs. Another remarkable fact about this instrument and a direct result of the efficient arrangement in the magnetic field of the moving coil is the perfect damping and rapid action of the pointer, even when using an air-gap of more than 1/16 inch. The moving element has no pivot base such as is ordinarily used in other instruments, and usually glued to the insulation of the wire wound on the moving coil. On the other hand, part of the frame on which the wire is wound is bent so as to form a substantial support for the pivot, bridging across the wire on the coil. The pivot is mounted securely on these bridge poles by means of a shoulder and nut. This construction prevents turns of the coil becoming short-circuited, a common fault in ordinary instruments. The wire in the moving coil is released from all mechanical stresses and is perfectly insulated from all metal parts. The springs used in the instrument are so strong that vibrations of the dashboard do not affect the indications. The convolutions being spaced widely apart, there is no possibility of their touching each other. Temperature tests show that with a difference of 40° F. the instrument reads 1.9 per cent. high, as against 3 per cent. for another well-known make.

Digitized by Google

IGNITION

I have pointed out what seem to be the essential requirements in a starting and lighting system and shown methods and apparatus for accomplishing the work in a simple and reliable manner. I now come to the last but yet very important section of the subject, ignition. Having stated that ignition devices must operate below the cranking speed, I wish to describe briefly two new types of magneto constructed particularly for easy starting without the use of battery, auxiliary coils, or any external devices. Fig. 8 is an assembled view of a six-cylinder high-tension magneto. This view shows the water- and dust-proof construction. The important dimensions, such as concern the location of the holes in the base, and the distance from the holes to the beginning of the taper on the shaft, etc., conform in every way to the S. A. E. standards. In Fig. 9, *A* is a view of the armature showing the collector spool, bearings and circuit-breaker. *B* illustrates a sleeve construction mounted within the pole-pieces, rotatable with the advance lever. The armature *A* turns within the sleeve *B*. From this construction it will be seen that for any speed the break is always in the same position relative to the sleeve; that is, there is practically no difference in the strength of spark when the break is in advanced or retarded position, the speed remaining the same. By this construction an advance of 75 or 80 degrees is obtained, which is essential for long-stroke slow-speed six-cylinder engines.

As is generally known, the orthodox high-tension magneto is of the bi-polar type, and in order that the sparks should occur at the proper intervals the armature of the magneto must be rotated at one and a half times crankshaft speed when attached to a four-cycle six-cylinder engine. Since the usual high-tension magneto does not deliver reliable sparks at the lowest engine speed, over a range greater than 35-45 degrees, the available spark advance, when referred to the circumference of the flywheel, is but two-thirds of the above, namely, 23.3-30 degrees. Hence when the piston is at top center on the compression stroke, even a spark advance of 30 degrees will generally be found insufficient to enable the engine to deliver its full power. The usual procedure to overcome this late ignition is to use a little richer gas mixture, and as a consequence when the car is driven at high speed for an extended length of time, most sixes manifest a pronounced tendency to become overheated. With an available spark advance of 50 degrees on the flywheel the necessity for richer mixture is dispensed with and the tendency to overheat, caused by the combination of late ignition and rich mixture, vanishes. Many six-cylinder cars can be throttled to a very low speed on direct drive but do not have starters which will crank the engines more than 25 or 30 r.p.m., and hence recourse must be had to auxiliary devices to give a spark strong enough to start the engine.

Fig. 10 presents a *distinctly* new type of high-tension magneto, which contains many interesting and valuable features, the first of which is seen in the said figure. The breaker is so constructed that the platinum points are external to the main breaker-box. These points are shown at

Digitized by Google

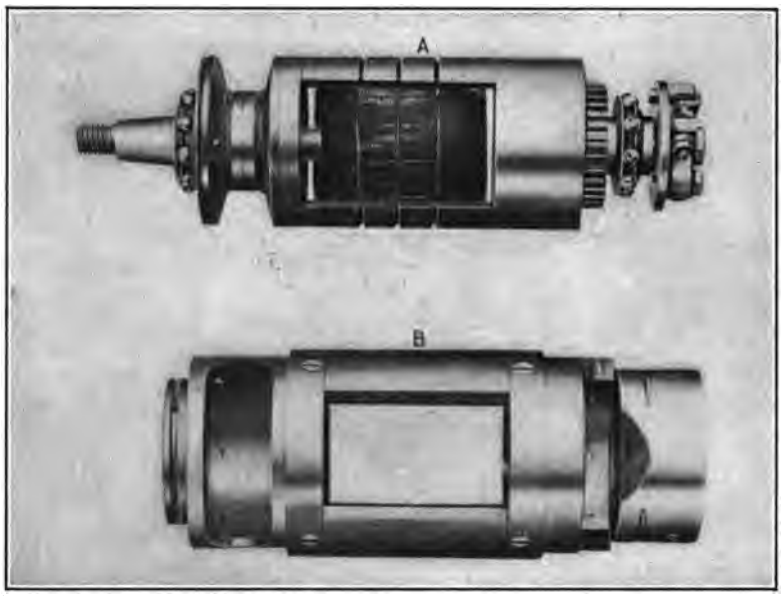

Fig. 9.

9 and are covered by a cap held in place by spring-catch *13*. By this construction it is possible to observe and adjust the breaker-points, if necessary, while the magneto is running. At the same time the points, being carried externally to the main breaker-box, are removed from the presence of oil, which is detrimental to the action of the spark points but essential to the wearing of the breaker itself. Fig. 11 is a side view of this machine with the dust- and water-protecting casing removed and one of the magnets withdrawn. No screws are used for holding the magnets in position and as soon as the side covers are removed the magnets can be taken off. This view shows the coil *C* (shown in Fig. 12) with its core *5* resting on field-pole pieces *1* and *2*. The coil *C* can be readily removed by taking out two screws *14* and disconnecting the primary lead *8*, which is attached to the side of the coil. An important feature of the coil is that the heads are of insulating material and there is no tendency for the high-tension current to jump to the side as in the ordinary armature type magneto. The high-tension lead is brought out to a connector *6* and carried to the insulated high-tension lead running to the distributor by means of a special connector *7*, no collector spool being necessary. It will be seen that this disposition of the windings makes them readily accessible and lifts them up out of the lower portion of the magneto where they are mounted in the ordinary type of magneto. The parts are shown more clearly in Fig. 12, which will also serve to explain the principles involved in the

Digitized by Google

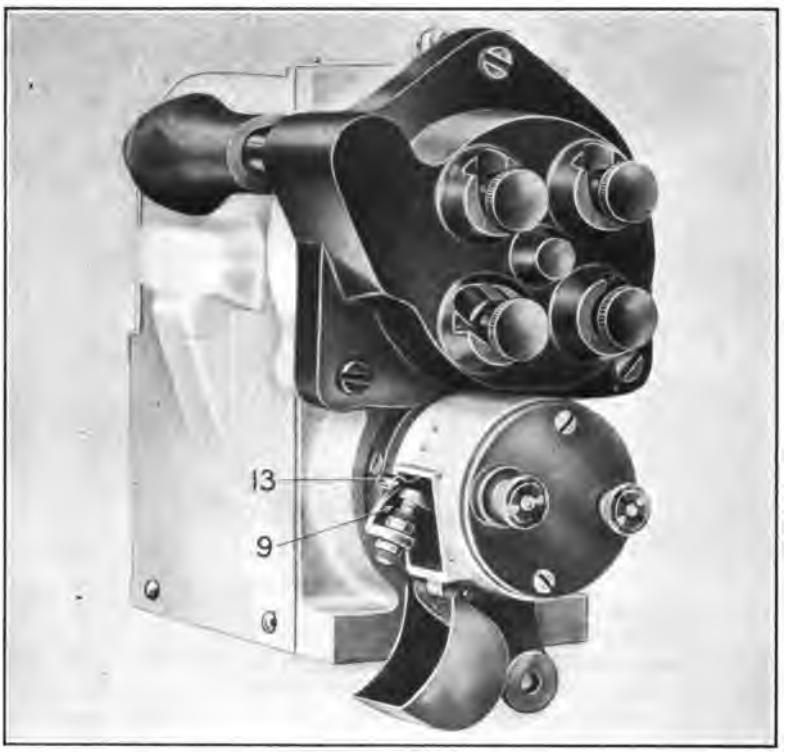

Fig. 10.

operation of the magneto. *A* is the field-pole structure consisting of a non-magnetic shell, assembled to which are the field-pole limbs *1* and *2*. Mounted on suitable bearings is a rotor *R*, having two rotor pieces, *3* and *4*, between which is a block of non-magnetic material serving to hold the entire rotor structure together. The rotor pole-pieces run in close proximity to the flanges *11*, and when the machine is assembled the magnets *15* (Fig. 11) fit within a space *12*, against the flange *11*, one magnet on either side of the shaft. It is thus seen that the rotor *3* is *always* of *one polarity* and the rotor *4 always* of the *opposite polarity;* consequently there is *no change* in direction of the magnetic flux through the rotors; the only reversal of the magnetic lines takes place through the laminated pole-pieces *1* and *2* and the core *5* of coil *C*. This causes a short free path for the reversal of the magnetic lines and hence the hysteresis and eddy current losses are reduced to a minimum. The result is a most efficient magneto per pound of material.

Digitized by Google

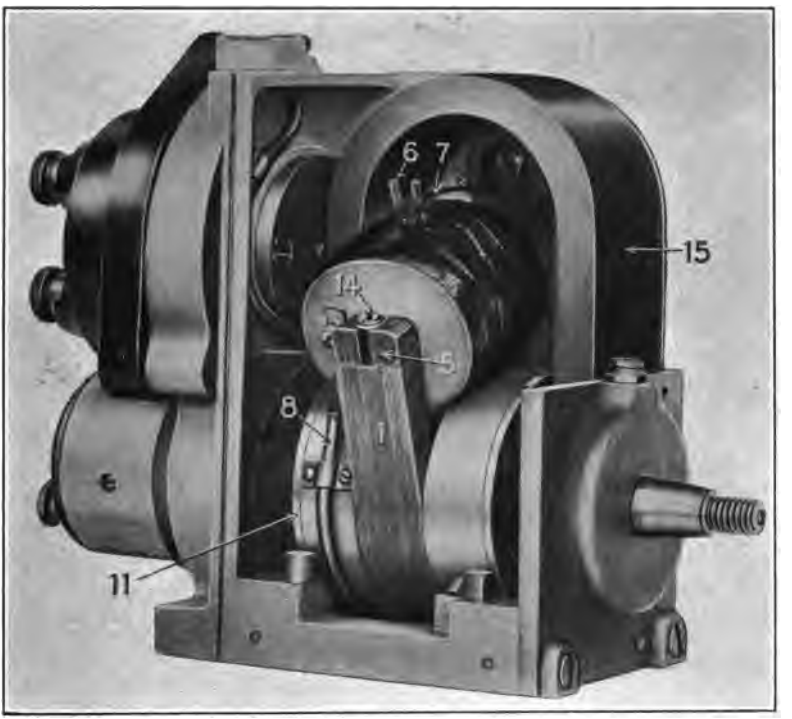

Fig. 11.

A light-weight magneto of the type shown in Fig. 10 will throttle down to 60 r.p.m. with a .025″ plug gap under 65 pounds compression. This is over 100 per cent. slower than any engine will turn over on its own power and well below the limit for cranking speed mentioned in the first part of this paper. With either type of magneto there is no excuse for having batteries around the car for ignition purposes. All that is necessary is a simple switch on the dash for short-circuiting the magneto when stopping.

Whether or not the theory is correct, that the explosive charge contains numberless small spheres of hydro-carbon floating in air, the spheres having an outer layer too weak to burn quickly, next gas stratum of the right composition, followed by a layer too rich for immediate combustion and a center of unvaporized gasoline, or whether some other theory holds good, the fact remains that the charge under compression must have something more done to it than mere "piercing."

Digitized by Google

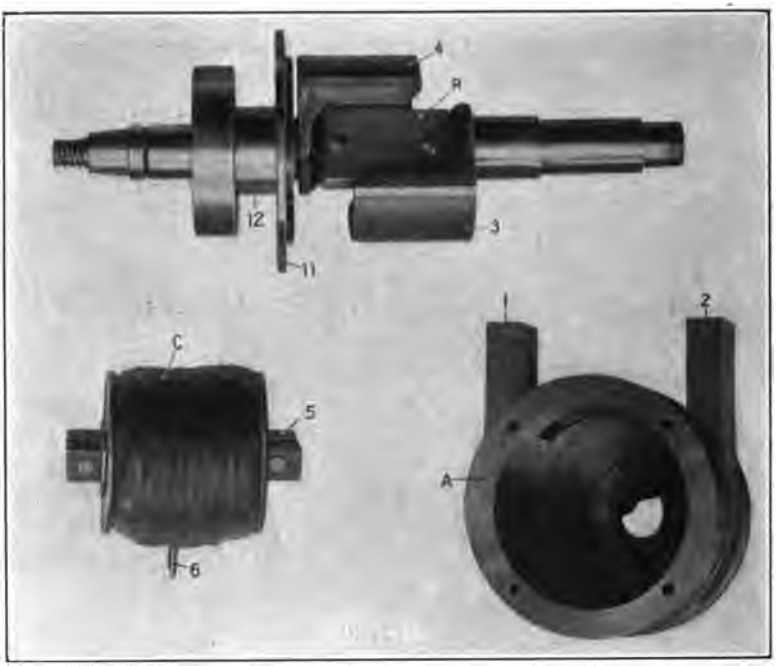

Fig. 12.

The spark must carry heat in order to actually burn "any old" mixture that may be present.

DISCUSSION

W. H. CONANT:—I think the author is right in speaking of the tendency towards 12-volt systems. One feature he did not emphasize concerns the efficiency of starting motors wound for twelve volts. The same efficiency can be obtained with less weight or *higher* efficiency with the *same* weight.

Mr. Libby mentions the size of the plates of a storage battery, stating that it should be such as to furnish sufficient power. I want to call attention to the fact that the quantity of electrolyte or acid and its diffusion and distribution, are just as important as the size of the plate or the surfaces of the plate exposed. That is not generally appreciated.

I believe it is not good practice to put the headlights or side-lights in series. Headlights have a tendency to flicker, having poor contact at times, which means that if one lamp be in trouble, both will go out.

I agree that fuses are desirable in the starting motor circuit. I question, however, whether this is practicable. I am acquainted with some experiments which were conducted over a number of years in an endeavor

Digitized by Google

to perfect enclosed fuses, and know that it is very hard to predict exactly what they will do, even if specified as closely as in Mr. Libby's suggested requirements. Assume, however, that we could obtain fuses such as are described and that one is blown. We must take it that it was blown because the circuit was overtaxed. Something may be wrong with the engine, requiring an unusual amount of power to turn it over, when it may be very desirable to start it immediately. If the starting circuit be open, considerable embarrassment to the car operator results. He must find the fuse and replace it. At that particular moment it is more than probable that he will not have a good one with which to replace the burned fuse. He will have recourse immediately to a nail or a pair of pliers or screw-driver or something to close the circuit; and once it is thus closed, it will remain permanently without a fuse. We have learned this from experience with other electrical circuits.

I agree heartily when Mr. Libby sees the need of ammeters or indicators in the charging circuit. Further, I doubt if a simple indicator showing whether the battery is on charge, is discharging or the circuit is open, is sufficient. I believe the instrument should show the rate of charge and possibly the rate of discharge, although the latter is not so important. It is of considerable benefit to know the output of the battery, but it is still more important to know what it is receiving. The contention may be raised that car owners and operators would pay little attention to an ammeter, but such a claim would have been made years ago concerning the details of engines. We find today that car drivers take great pride in learning about the details of their mechanical devices, and I think it will be only a matter of time before they will show similar interest in the details of the electrical systems.

A. D. Libby:—I did mention the efficiency of the particular motor in question, stating that the small one, weighing twenty-two pounds, was able to take care of a big six-cylinder engine, turning it over about one hundred revolutions per minute; the curve (Fig. 3) shows the efficiency of the machine.

The matter of plates and acids, and all such details, I did not take the time to go into, because they were qute thoroughly discussed in the paper by Mr. Waller, referred to.

I was not aware that I stated that the car should be wired with head- and side-lamps in series. I did state that *B* of Fig. 7 is a circuit which should be used on the ideal car; in it lamps are wired in multiple. Likewise circuit *C* is a multiple one. Circuit *D* is the ordinary design for a three-wire system, of which there are thousands of lamps in use, and was used for a couple of years by one of the car builders, putting out 30,000 or 40,000 cars per year. I have had some experience in driving a car wired with that circuit and with the generator as described and shown in my paper, and found there was absolutely nothing wrong with the circuit. The circuits shown as *A, B, C* and *D* in Fig. 7 merely illustrate what the car builder can do if he encounters the objection of higher prices on 14-volt lamps.

Digitized by Google

I think there is a chance for education by all who are advocates of the higher voltage system, to get the bulb manufacturers more interested in it. My contention is that all that is necessary is for a car builder to come forward and ask for two or three hundred thousand bulbs and he will get a price on 14-volt bulbs the same as he is getting now on 7-. I have been informed by the bulb men that the 14-volt bulb is just as good a focusing bulb as the 7-. The filaments can be made as strong as for the 7-volt lamp, I have been told and in use I see no difference; so practically the only objection to the higher voltage bulbs is that they *now* cost a few cents more than 7-volt. I believe the time will come when the 12-volt system will be adopted as the mean between the low and the high; as it gives all the snap needed for the starting motor, gets away from the complications of higher voltages and gives all the simplicity of the 6-.

R. McA. Lloyd:—As Mr. Libby said the 6-volt system has probably been built up around the 6-volt storage battery, but I differ with him as to the possibility of getting higher voltage bulbs that are as good or as cheap. The 12-volt bulb takes a longer filament, costs more, is not as durable and does not focus as well. I do not say it is impossible to make it focus as well as the 6-volt bulb, but bulb manufacturers want the filament to be confined to the least possible space, so that they can project the light to the greatest possible distance. At the present time the feeling among the bulb manufacturers is that they can make a more satisfactory bulb of 6 or 7 volts than of 14.

Electrical engineers succeeded in developing a one-wire system for railway work and surely if they can make electrical installations with a grounded circuit in trolley cars and railway locomotives, they can do so in automobiles. There are no doubt lots of opportunities for short-circuits and will be in some cars as they get older, but the installation can be made properly. It is far the simpler method of wiring the car and possesses other advantages. I am inclined to think that the 6-volt system and single-wire will win out. It certainly should not be opposed by electrical engineers just because the telephone and electric light systems were developed with metallic circuits.

Joseph Bijur:—I have had experience in designing both 6- and 12-volt systems and find no reason for preferring one over the other. From the technical standpoint I prefer the 6-volt system, although I agree that it is a purely arbitrary thing, which came up as a growth. I think the reason some prefer the 6- to the 12-volt system is chiefly this: for a given voltage a 6-volt battery will weigh and cost less than a 12-volt of equal watt capacity. For the 12- more rubber jars are required and more space for installation. So from that standpoint the 6- is preferable. From the standpoint of the user it is a great deal easier to take care of and fill three cells than six, and they are a great deal more likely to be properly attended to.

The filament of the 6-volt bulb, having twice the cross-section and half the length of filament required for 12 volts, can be made stronger.

Digitized by Google

It is not much of a point whether the 12-volt bulb can or cannot be made satisfactorily. I have no reason to think that the larger area will not work out satisfactorily. The 6-volt filament, being short, can be brought into focus, whereas the 12-volt filament, of twice the length, cannot. In the case of the small bulbs the difference between 6 and 12 volts is very manifest; in the case of headlight bulbs it is not. But with durable bulbs that take very little current and have long, thin filaments, the low cost is much more impracticable in the 12- than in the 6-volt system.

In regard to the voltage of a motor I cannot see any difference at all. The "punch" of a 6-volt motor is just as vigorous as that of a 12-. The same designer ought to turn out a 6-volt motor that is as good as a 12-volt motor. It is common practice for motors of the weight mentioned by Mr. Libby, around 20 or 22 pounds, to deliver considerably more horsepower than the particular motor he speaks of, and to have considerably higher efficiency. There is no reason why this cannot be done with 12 volts but there is no doubt at all that it is being continually done with 6. That is, the efficiency of a good motor, working hard, should be about seventy eight per cent., and I do not know why the power of a motor of that weight should not be somewhat over 1½ horsepower. So that I feel that the statement that 12 volts is preferable on account of the activity of the electric motor, without a statement showing the advantages of both the 6 and the 12, would not be entirely fair to the development of the art.

A. L. McMurtry:—In the early automobiles four volts was used for ignition, and not six. The first automobiles with storage battery for ignition were foreign cars. They were equipped with two sets of 20-ampere-hour storage batteries.

The trouble with the type of clutch described in the paper is that it engages when the engine rocks, or reverses on stopping, so that it turns the electric motor which tends to strain the chains and gearing. In one or two installations on last year's cars this is very noticeable.

As to the single-wire system, the instances cited simply show mechanical defects. It is a matter of insulation; and as electrical engineers have been insulating circuits carrying possibly ten thousand times the voltage in question, we can surely insulate properly a system carrying the small voltage.

I have a car without an indicator or ammeter to show when the generator is working. The battery on this car has been exhausted at different times, mainly on account of generator troubles. I knew nothing of the trouble until the lamps started to burn dim. Moreover, an indicator assists greatly in the location of trouble. If in a lighting and starting system the batteries are found weak, the indicator will tell immediately if the generator is doing its work, or if there is a leak in the circuit.

In placing lamps in series, aside from the fact that when one lamp goes out the other also will go out, we use very efficient tungsten bulbs,

Digitized by Google

and it is necessary that these have the same characteristics for use in series. The makers of tungsten bulbs make a special bulb for series street lighting, and the use of ordinary house lighting bulbs in service is not advocated. The same applies to automobile bulbs. The majority of bulbs are made for six volts. While one minute we are trying to standardize the bulbs, the next minute a suggestion is made to make another voltage bulb and another base.

I agree thoroughly with Mr. Bijur on the cross-section of the filament, and I want to say that the six-volt fifteen-candlepower bulb burning at full voltage will give a light of greater power of penetration than a twenty-four-candlepower bulb burning below rated voltage, which it generally does if connected to the electrical system of the average automobile. It is a matter of the concentration of the filament as near the focal point of the reflectors as possible.

A. D. LIBBY:—In connection with the clutch, the last speaker mentioned the rocking backwards when the engine stops. When this takes place the pawls drop down onto the noise-killing element and there is no noise due to this action. The strain is taken by the abutment back of the pawls, none whatever being carried by the pins; consequently there is no danger of breaking any of the parts.

R. J. NIGHTINGALE:—In regard to indicators, my experience has been that they are worthless unless used in connection with the hydrometer syringe, which is the only instrument capable of showing the actual condition of the battery.

Contributed by A. W. Copley

Several points in Mr. Libby's paper warrant further consideration. The matter of the number of units to be used for the electrical equipment of automobiles is bound to narrow down to the most compact and efficient arrangement. On the face, it seems foolish to put two electric generators and one electric motor on a car, and the question at once arises whether any two of the three functions can be combined in one machine. Investigation shows that combining the functions of motor and generator in one unit is not always economical. Mr. Libby has pointed this out. There is certainly no saving in weight in combining the units, but for small engines there is economy in the combination, chiefly on account of the elimination of one drive. On small machines the problem of getting several units connected to the engine shaft in a neat and satisfactory manner, is quite serious.

The combining of ignition with the lighting unit is desirable because of the elimination of a drive and also because of the saving in space and the utilization of one support rather than two for the main parts of the apparatus.

Mr. Frank Conrad in a paper* read before the American Institute of Electrical Engineers traced the development of the ignition system and showed that there is no advantage in an alternating current generator (such as a magneto) over a direct current for obtaining proper ignition.

*November, 1913.

Digitized by Google

If this is the case, as I believe, the addition of the magneto is useless and takes up needed space, whereas the ignition device designed to work on the battery can be mounted right on the generator end-bracket without sacrificing generator or ignition performance or efficiency.

Mr. Libby's description of a pawl-and-ratchet type clutch is very interesting. Unless the clutch were of very large proportions I would be surprised at the performance he records, if it includes not only regular starts, but back-fire conditions, etc. In any case I would expect this type of clutch to be noisy in operation. It is conceivable that a very free engine with good compression would run ahead after passing compression, so fast as to throw out the pawls, which when they dropped back would receive a blow from the teeth which would certainly cause trouble. It is not impossible to design a roller clutch which will withstand 15,000 operations as mentioned in the paper. In fact, I have seen a roller clutch which, upon being examined after operating 25,000 times, was found to be absolutely as good as new. It is simply a question of getting the clutch parts of the proper proportions, using proper materials and treatments and providing plenty of lubrication. I expect that the roller clutch will prove more reliable than the pawl-and-ratchet type.

In general the clutch proposition is a difficult one, and for that reason principally I favor a flywheel-drive application of the starting motor, with a shifting pinion arranged to be entirely out of mesh when the engine is running, thus definitely disconnecting the motor from the engine.

The proper gear ratio between the motor and the engine should be decided first by the amount of torque required to start a stiff engine. The motor should not be geared to give less than this maximum torque when locked, with a reasonable factor of safety. If it is geared lower than this the cranking speed may be slightly higher, but such higher speed is obtained at the cost of more energy being drawn from the battery and the possibility of not being able always to start the engine turning. Mr. Libby's illustrations of a motor geared first at 25.12 and then at 16.9 to 1, shows the extra drag on the battery of the lower ratio, which is a straight loss of energy. In addition it should be mentioned that when the engine is cold and stiff and the battery possibly not fully charged, the fact that the 25.12 to 1 ratio gives 50 per cent. greater starting torque than the other will be very much appreciated by the driver.

I agree fully with Mr. Libby that a cranking speed of 100 to 135 on a four-cylinder engine when in average normal condition, is plenty. A higher speed only causes excess energy to be taken from the battery and gives no real advantage. For a six-cylinder engine a lower speed is permissible.

The lighting generator must be regulated in some way to prevent overcharging of the battery. This can be accomplished by either voltage or current regulation. The latter is by far the easier to attain, as good enough current regulation can be obtained by the bucking series field without moving contacts. If voltage regulation is wanted, the regulator which has vibrating contacts is necessary; it is on account of the contact

Digitized by Google

problem, on low voltages especially, that voltage regulation is not generally used. With voltage regulation the battery is charged at a higher rate when it is discharged than when it is charged. This is a very desirable condition. If, therefore, contacts are used for regulation, the voltage rather than the current should be regulated. For current regulation there is no need, however, of going to contacting devices such as Mr. Libby described, ingenious as they may be.

What kind of an indicator to use on the electrical system of the car is an open question. The charge and discharge of the battery are shown by an ammeter; whether the generator is doing its duty in charging the battery. The voltmeter shows the condition of the battery. I grant that it is desirable to know both of these matters and that the ideal installation includes both voltmeter and ammeter, but the multiplication of instruments on the dash and the complication of wiring are undesirable, and for the sake of simplicity I believe that one instrument only constitutes the best arrangement. The kind of instrument should be determined by the point which it is desired to make known, the condition of the generator or the condition of the battery. Personally I prefer to know the condition of the battery, as it is much more liable to be run down than the generator is to be defective. The ammeter tells whether the battery is being charged; the voltmeter tells whether it needs charging. It is not desirable to try to combine both functions in one instrument, as in such case the meter must be made with center zero, which greatly restricts the length of scale. This makes real accurate reading of the meter impossible. The voltmeter, on the other hand, can be made with suppressed zero so that the full length of scale covers a range of only a few volts, and as a result very accurate reading of the voltage is possible.

Reply by Mr. Libby.

I cannot agree with Mr. Copley that "there is no advantage in an alternating generator (such as a magneto) over direct current for obtaining proper ignition." On the contrary, Mr. Conrad's paper shows, I think, one of the advantages of using the magneto for ignition, in that at the time of spark, a high potential is produced which breaks down the resistance of the gap, and the rupture of the gap is then followed by an arc flame which I consider very essential for the quick firing of gas, particularly when the gasoline is of poor quality and the mixture is bad, both difficulties being likely to occur often. Combining ignition with a lighting generator as Mr. Copley suggests, immediately raises the question of battery versus magneto ignition. As Mr. Conrad states, "the magneto possesses several inherent qualities which are desirable in a spark-producing device." I think that his paper constitutes a better argument for magneto ignition than for battery ignition, particularly in view of the fact that he states that a primary current of about five amperes is required to give a satisfactory discharge in the secondary circuit. I consider an ignition system requiring this amount of battery current uneconomical. I do not believe in making so complicated a piece of appara-

Digitized by Google

tus for lighting and ignition as is shown and described in Mr. Conrad's paper. There is nothing mysterious about a magneto, as some would have us believe. One of the best answers I can make to Mr. Copley's discussion is that one of the magnetos mentioned in my paper, when installed on a car equipped with a well-known battery ignition system, increased the speed of the car about 9 m. p. h., reducing the gasoline consumption 20 per cent., due to its ability to deliver an arc flame. In a word, my argument is that battery ignition is not as efficient as magneto ignition; consequently, when battery ignition is used in combination with a lighting generator, efficiency of performance is sacrificed as well as efficiency in care and maintenance.

Mr. Copley states that he has seen a roller clutch which, after operating twenty-five thousand times, was found to be as good as new. I have never seen any of this type that would stand up. I call particular attention to Mr. Copley's remarks that in order to get a satisfactory roller clutch, four things are necessary: proper proportions, materials and treatment, and plenty of lubrication. In other words, a roller clutch has to be very carefully made; that is why I say I do not consider it a good proposition commercially. A clutch such as is described in my paper does not have to be made with the accuracy required in a roller clutch. It has only 6½ inches diameter, and is suitable for the largest automobile made. It could be made somewhat smaller, how much I am not prepared to say. Contrary to Mr. Copley's expectations, the clutch is more quiet than a roller clutch. This is on account of the disposition of the pawls, which are such that there is always one very nearly in engagement when they are down in position; and they never fly out when going over compression, as suggested by Mr. Copley.

Mr. Copley admits that the clutch proposition is a difficult one and for that reason favors the flywheel-drive as an application for a starting motor. My contention is that this clutch solves the difficulties which Mr. Copley has in mind, and for that reason its application direct to the crankshaft of the engine, as shown in Fig. 4 of my paper, makes a better starting installation than a flywheel type of job.

The regulation obtained by the generator, as shown in Fig. 5 of my paper, is of the "current type." Evidently Mr. Copley does not understand the method of regulation in this machine, as he implies in his discussion that contact devices are somewhat complicated. On the contrary, the construction is the simplest imaginable. The contact shown in Fig. 5 is the main line contact, by which the circuit is closed from the armature to the battery. A top view of the generator shows an auxiliary contact by which a resistance, which is carried within the generator, is cut-in in series with the field winding when a car speed of 35 to 40 m. p. h. is reached. The characteristic curve of the generator shown in Fig. 6 does not do the generator justice, since, as the battery approaches the fully charged point, the curve drops off. The curves as shown were taken during a period of a few minutes.

It seems to me too much to ask an owner to equip his car with a

Digitized by Google

voltmeter and ammeter, but I believe that a suitable ammeter is necessary, because this will show what is being put into the battery and what is being taken out, whereas, a volt-ammeter does not always indicate that the battery needs charging; for instance, the battery may be on an open circuit and the voltage appear very nearly normal, whereas the battery may be very nearly discharged, which state is indicated better by gravity readings.

(Vice President Zimmerschied Assumed the Chair)

AN ENGINEERING BASIS FOR TAXATION OF MOTOR VEHICLES

By C. O. Egerton and S. I. Fekete

(Members of the Society)

Within the last ten years the highway builders of this country and Europe have been compelled to make radical and costly changes in their methods of road construction. That these changes have been occasioned largely by the introduction of automobile traffic is undeniable, for the problem of economic construction and maintenance of roads for horse-drawn vehicles was satisfactorily solved approximately a century ago by English and Continental road builders.

But because automobile traffic has destroyed roads which successfully sustained animal-propelled vehicles, let us not indict it with wanton destruction of property until its side of the case has been fairly presented. If we were to take a typical automobile and a typical horse and wagon of equal weight and move them over parallel stretches of equally good roads at equal speeds until the road surfaces were no longer fit for economical use, we would probably discover that the roads would wear out at very nearly the same time. If one road lasted longer than the other, it would quite possibly be the road traversed by the motor car.

Actually, then, the cause of the increase in road destruction is due in the first place to the speed at which the motor car can move as compared with a horse and wagon; and in the second place to the increased volume of automobile traffic as compared with animal traffic. The cause for the former popular demand for a specific automobile tax arose probably from the fact that the motor car when first introduced was considered a luxury, while the horse and wagon have been regarded as necessities from time immemorial. At the present day, however, this distinction is certainly obsolescent if not obsolete. While it is essentially illogical that horse-drawn vehicles should be exempt from specific taxation, when they undoubtedly do their share of road damage,

Digitized by Google

it is nevertheless a fact that motor vehicle users are the staunchest supporters of road extensions and maintenance, as well as the greatest beneficiaries therefrom, and as such should not escape a reasonable share of the expense so entailed, whether the cost is levied as a specific motor car tax or as one upon personal property. Assuming then that the motor car owner is to pay a reasonable tax, the amount of his contribution should be in direct proportion to the amount of damage which his vehicle is capable of inflicting upon the road surface.

CLASSIFICATION OF ROAD-DESTRUCTIVE ELEMENTS OF A MOTOR VEHICLE

The amount of damage which a vehicle can inflict upon a road is fundamentally dependent upon its weight and its velocity, but in order to better study these elements we must dissect them as far as possible.

The destructive power of weight alone upon a given type of road surface may be summarized as follows:

1. It is proportional to the pressure per square inch of tire contact.
2. It is dependent upon the character of contact, i. e., whether metal, solid rubber, or pneumatic tires are used.
3. It is inversely proportional to the contact diameter of the wheel.

The destructive power of velocity in conjunction with weight upon a given type of road surface is proportional to the linear distance which the point of road contact traverses in a unit of time which is, of course, directly dependent upon the capacity of the motor.

In other words, combining both elements of weight and velocity the destructive capacity of a motor vehicle is dependent upon the resistance encountered due to contact of various types of wheels with road surfaces at various speeds.

To set forth as clearly as possible the state of equilibrium existing between the forces producing and the forces consuming the vehicle's energy, let us suppose that we have in a convenient place on the moving vehicle two indicators. Let us say that the first indicator registers the speed of the car. The second indicator registers the horsepower acting through the drive wheels at the speed shown by the speed indicator. If now we start the car and gradually increase the speed until we are unable to make our speed indicator register any increase of velocity, we shall arrive at the conclusion that the power registered at that speed by our power indicator is being entirely consumed in overcoming external forces acting upon the car.

SOURCES OF EXTERNAL RESISTANCE

The external forces which prevented increase of speed in our supposed car are two in number, and are

1. The resistance which the surrounding air offers to being displaced by the moving car.
2. The resistance which the road surface offers to being displaced by the wheels of the moving car.

Let us consider the general characteristics of these two resistances.

Digitized by Google

AIR RESISTANCE CHARACTERISTICS

The work required to move a vehicle against air resistance is proportional to the area exposed and proportional to the square of the velocity at which the vehicle moves. If we plot as a curve the work required to overcome air resistance, using for abscissæ the velocities of the moving vehicle in miles per hour, and for ordinates intensity of pressure at each velocity, the curve will be similar to that shown in Fig. 1.

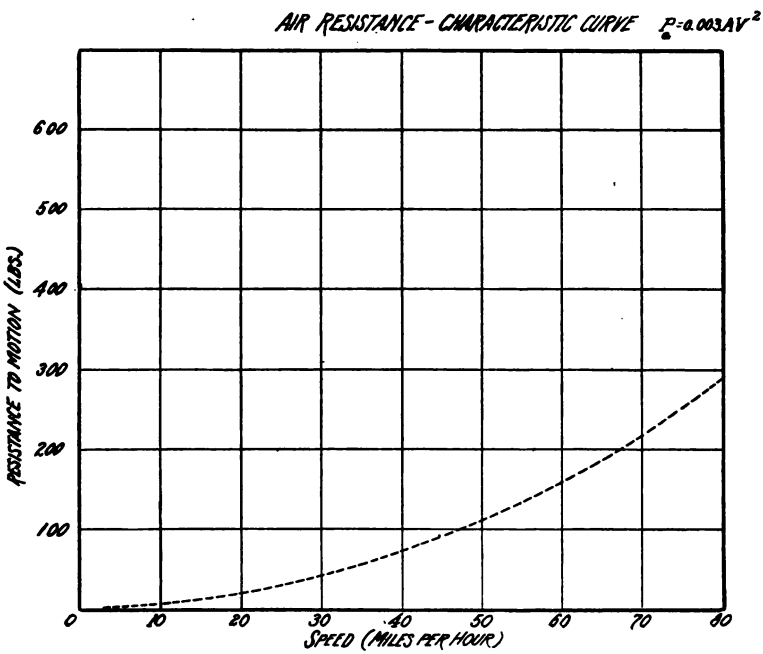

FIG. 1

ROAD RESISTANCE CHARACTERISTICS

According to the theory of rolling friction, a body passing over a surface produces a depression in that surface. The depth of this depression depends upon the relative hardness of the surface and that of the body.

The force required to produce motion in the above rolling body varies directly as the pressure between the body and the surface; directly as one-half the chord of the arc of depression; and inversely as the radius of the rolling body.

Referring to Fig. 2,

Digitized by Google

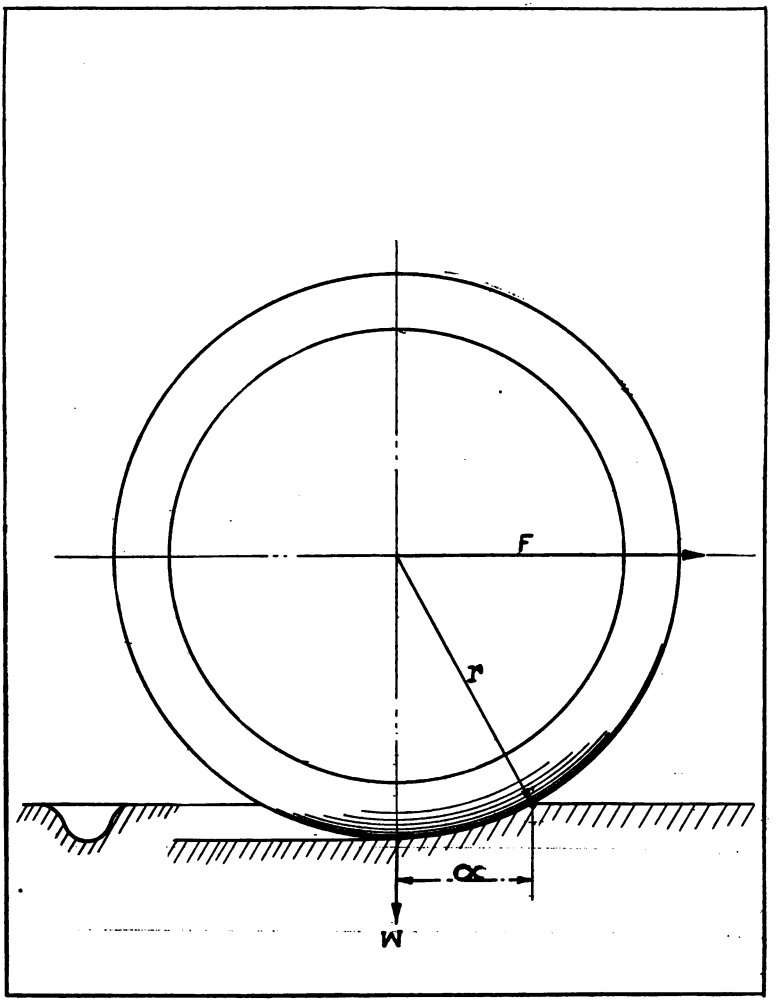

FIG. 2

$$F = \frac{W\alpha}{r} \qquad (1)$$

$$\alpha = \frac{F}{W} r \qquad (2)$$

W = Weight in pounds upon wheel.
F = Force in pounds to produce horizontal motion.

Digitized by Google

$r = \frac{1}{2}$ diameter of wheel.
$\alpha =$ Coefficient of rolling friction.

In this equation the fraction $\frac{F}{W}$ represents nothing else than the force per pound of weight required to cause rolling motion.

The magnitude of the fraction $\frac{F}{W}$ may be accurately determined experimentally for the various combinations of road surfaces, types of tires and wheel diameters in common use at known speeds. Let us suppose we have determined by means of drawbar-dynamometer or by retardation the value of $\frac{F}{W}$ required to move various diameters of wheels equipped with a certain kind of tire over one class of road surface at known speeds. Having done this we may from equation (2) compute the values of α for various sizes of wheels for each possible combination of tires and road surfaces. The results of the foregoing computations may then be tabulated; a separate table being made for each com-

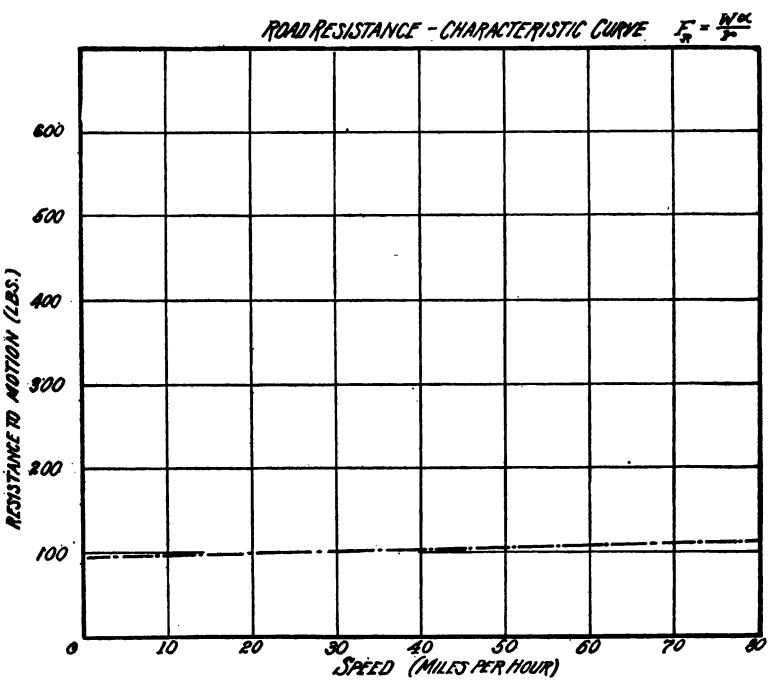

FIG. 3

Digitized by Google

bination of tire and road surface and each table giving the value of α corresponding to various possible diameters of wheel.

If we plot a curve representing the work required to overcome road resistance, using for abscissæ the velocities of the moving vehicle in miles per hour, and for ordinates the magnitude of the tractive effort F which will be required to overcome the force caused by road resistance at that velocity, we will have a curve similar to that shown at Fig. 3.

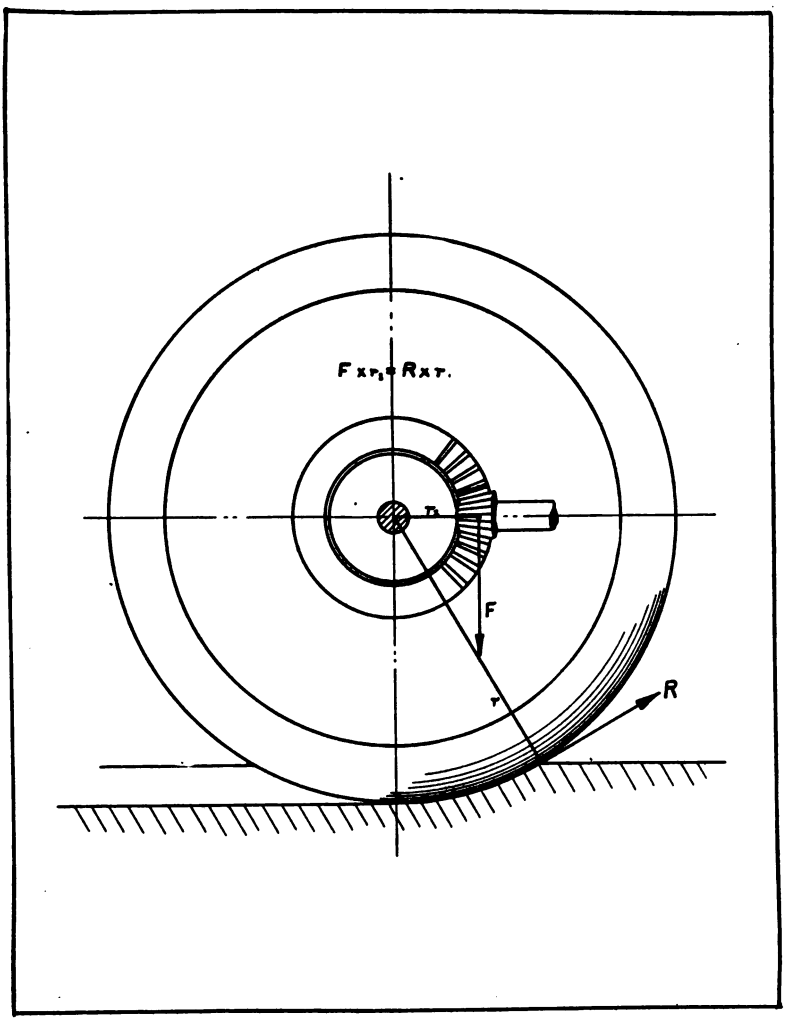

FIG. 4

Digitized by Google

The force F is in effect that which would be directly exerted by a horse in dragging a vehicle.

In our case we must instead deal with a force tending indirectly to produce horizontal motion by rotating a wheel. In other words, we have a mechanical couple composed of a force F tending to rotate the wheel through the medium of a gear or sprocket; opposing the road resistance R applied at the tread of the tire. (See Fig. 4.)

Instead, therefore, of pure rolling action we have a combination of rolling over the road surface and a tangential force acting between the tire and the road surface.

There will be two stages of the tangential phase: first, when the torque rotating the wheel is less than the torque due to the adhesion between the tire and road; second, when the torque rotating the wheel is more than the resisting torque due to adhesion between the tire and road. In other words, the two stages are when the tire does not slip and when it does slip.

HYPOTHETICAL ACTION OF WHEELS UPON ROAD

There are three general classes of road surface to which we should give consideration in regard to their behavior under the action of wheels.

The first class, such as brick and concrete, which show comparatively little deflection under the action of rubber tires.

The second class, such as asphalt, macadam, and bituminous macadam, which show some noticeable depression under wheel action.

The third class, such as gravel, earth and sand, which show very considerable depression under wheel pressure.

In other words, the surfaces are classified according to the approach of their materials toward theoretically perfect elasticity.

ROADS OF HARD MATERIAL

If we take the case of a concrete road or one of brick supported upon a concrete foundation, we have a condition closely resembling that of a beam uniformly supported from below and acted upon from above by repeated stresses. By simply making the depth of concrete sufficient the section subjected to stress will be able to sustain an almost infinite number of deflections without fracture. Consequently it would appear to be a practical impossibility to destroy an adequately constructed concrete road by rolling a loaded wheel over it.

If destruction exists, then it must be due principally to the abrasive action of the rolling body. Abrasive action being purely a function of the relative hardness and relative speed of the rubbing surfaces, it is obvious that an ordinary steel wagon-tire can do much more damage than a rubber tire for the following reasons:

A concrete surface consists actually of an almost infinite number of minute particles of sand and rock which project very slightly above the cement matrix in which they are embedded. The abrasive action therefore consists in either dislodging these from their bed or in crushing them. A rubber tire clearly cannot crush these particles, for being so

Digitized by Google

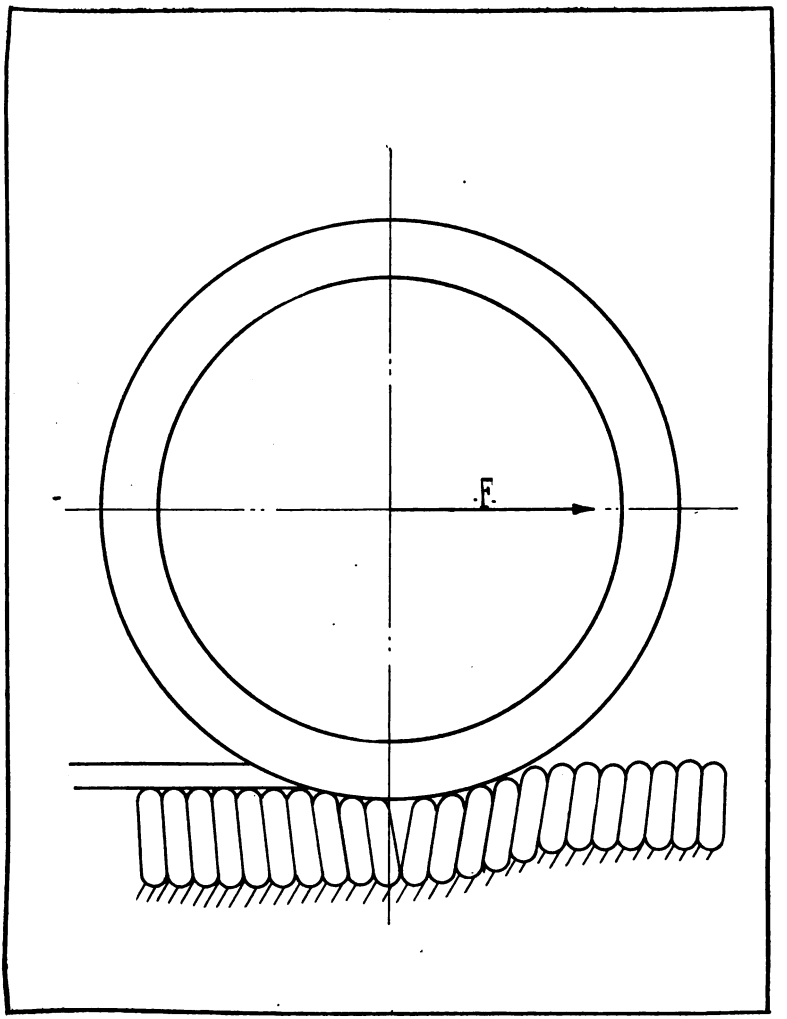

FIG. 5

much softer it is merely depressed by them and dislodgement while not impossible is improbable since it would be likely to occur only when the tire has in addition to its rolling motion a slip relative to the road surface. Below the average legal limit of speed this slippage has been shown to be so small as to be almost negligible. (See deductions of Henry Souther on Tire Slippage at Brooklands Race Track, S. A. E. Data Sheets.)

Digitized by Google

A steel tire in passing over projecting particles, however, has by virtue of its hardness the power to crush them. They then become powder, which is removed by wind, weather or other passing vehicles, leaving other similar particles exposed to subsequent similar action.

ROADS OF MEDIUM HARD MATERIAL

Let us suppose the second class of road surfaces is composed of a layer of short vertical rods fitting into sockets at their lower ends to allow oscillation in the direction of progression (see Fig. 5). The displacement of these rods as the wheel passes over them will be as follows: First, the rods ahead of the wheel are deflected in the direction of progression. Second, at some stage of the passage of the wheel the tangential component force due to the drive of the wheel becomes greater than the normal component due to the weight carried, with the result that a rod is deflected opposite to instead of in the direction of motion; thus creating or tending to create a space between it and its neighbor.

If, instead of independently acting rods, we have a surface layer composed of small crushed stones held together only by some adhesive compound, either a rupture or a severe strain is certain to occur at the point of deflection reversal.

With a substance possessing theoretically perfect elasticity the amount of work necessary to produce fracture of a given section is of course a fixed quantity; and the fracture may be produced either by applying a force of great intensity for a short time or by applying a small force for a long time.

A road surface composed of macadam held together by a bituminous binder is far from possessing perfect elasticity, so that while the viscous properties of the binder may reunite the particles of stone after a strain has been produced by a slowly acting force, it is reasonably certain that a suddenly applied force will completely rupture the continuity of the binding compound.

The power to produce this rupture is then clearly a function of the velocity with which the neighboring particles are separated and hence proportional to the velocity of the vehicle.

This tendency to break the continuity of the road surface is, however, only the first stage of the destruction. The second stage is reached when the speed of the vehicle is such that there is appreciable slippage between the tire and the road surface. The particles which have become loosened by the first stage of the process or during the passage of some preceding vehicle are then actually extricated from their place in the surface by contact with the tire which then has motion relative to the road surface instead of merely rolling over it.

ROADS OF SOFT MATERIAL

In the case of road surface composed of yielding material, such as sand, gravel or earth, having no extraneous material to bind its particles together, the particles subjected to pressure from a wheel are displaced until brought to rest by the friction between neighboring particles. If we

Digitized by Google

assume a static condition of a wheel resting upon such material, it will resemble that shown in Fig. 6. Suppose further that the material is composed of small, nearly uniform spherical particles. As the load of a wheel is applied acting through the resultant W to one particle of the upper

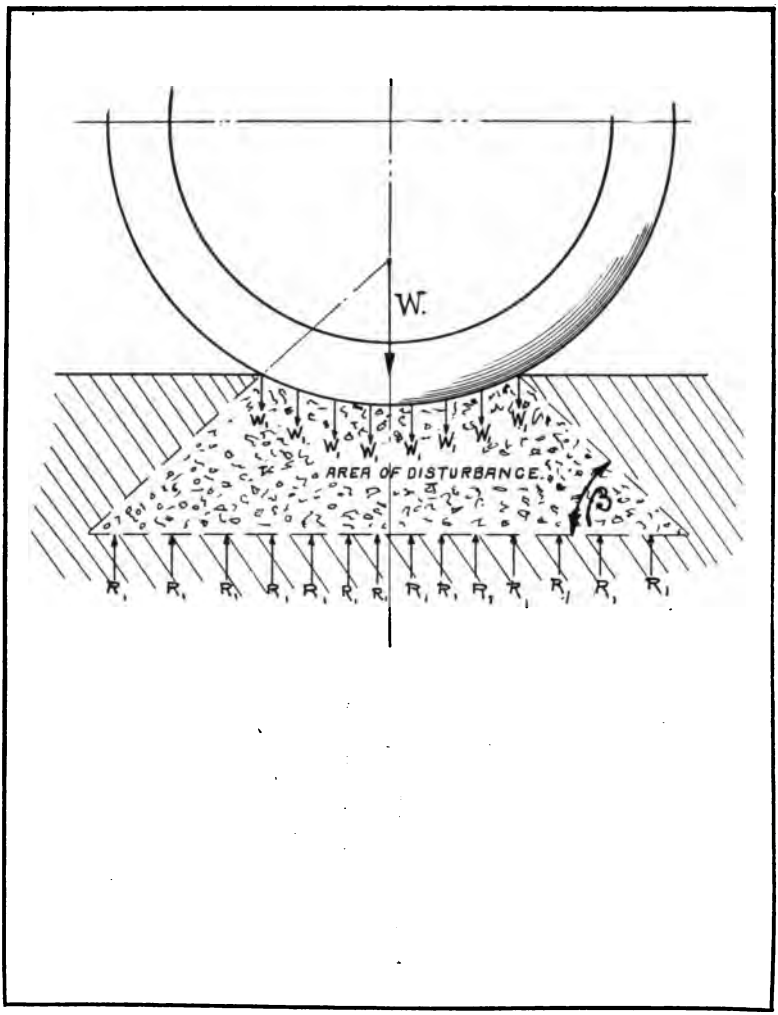

FIG. 6

surface, this particle is depressed, and as it moves downward it divides the pressure between two particles beneath it. These two in turn divide the pressure between three, and this process continues downward until the pressure has been distributed among so many particles that each

Digitized by Google

particle no longer has sufficient pressure upon it to produce motions in its neighbors.

In other words, a state of stable equilibrium has been reached. Of course, instead of one particle being in contact with the tire, its weight

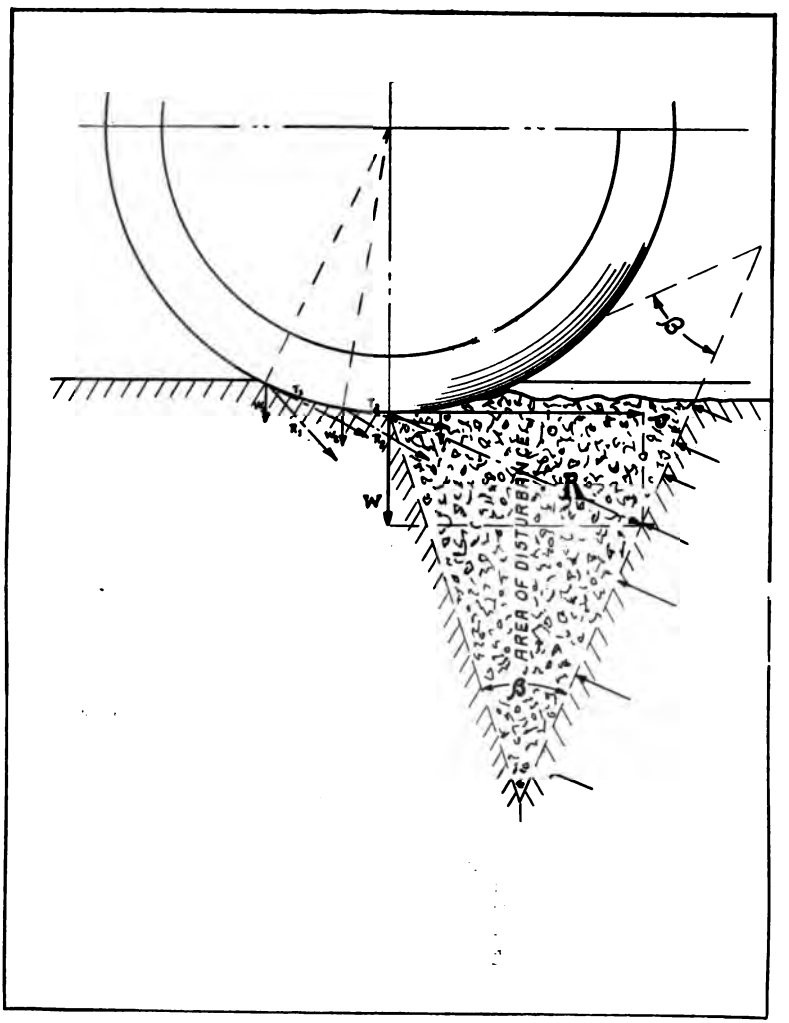

FIG. 7

is distributed in small increments like W_1 (Fig. 6), which are resisted by uniformly distributed small increments R_1 (Fig. 6), but the process of weight distribution is essentially as described and we have formed beneath

Digitized by Google

the tire a cone-shaped mass. The sides of the cone make the angle β with the base, which is, in fact, the angle of repose for the material under consideration. Such is the condition under static load.

Supposing now that we have the wheel progressing at a considerable velocity and at the same time exerting a turning effort against the road surface, we will have a condition similar to that shown in Fig. 7. We must now deal with a resultant pressure on our hypothetical cone, the direction of which is no longer vertical but deflected toward the rear of the moving vehicle. The pressure in question is the resultant of the combination of weight on the moving wheel with a tangential component due to the torque which produces rotation in the wheel. What we find, therefore, is that the axis of the cone is no longer vertical, but takes such an angle that the rear surface of our cone-shaped mass approaches or passes a horizontal line at the road surface. As long as the cone remained with its axis vertical there was sufficient mass of particles surrounding it to prevent any upheaval, but with the inclined position some of the stressed particles in the area of disturbance are exposed. The result is that there is an actual upheaval or wave formed behind the wheel. Because of this wave there is a displacement of material from the road surface.

It should be noted here that the same power of wave formation exists in the case of a horse-drawn vehicle, the only difference being in degree and direction of propagation of the wave. The horse-drawn vehicle propagates its wave ahead of instead of behind it, due to the fact that the friction of the wheel hub on the axle sets up a resistance to rotation which is balanced by a force acting between the tire and the road surface.

The conclusion we may draw from the analysis, however, is that the power as well as to some extent the velocity of the vehicle is instrumental in destroying the soft type of road surface. Perhaps the most perfect engine of destruction ever devised for this class of road is the horse-drawn buggy with an extremely narrow steel tire which cuts into the road surface with all the speed and effectiveness of a thin knife, leaving a rut which is augmented by succeeding vehicles with even normal tire widths. The action of tires having excessive pressure per unit of contact surface is therefore abnormal and will not be included in our analysis.

A potent factor in destruction of both soft and medium-hard roads is the action of a car as it passes rapidly around a curve. In this case the tendency of the tire to skid under the action of centrifugal force is proportional to the square of the velocity of the car and the radius of the curve upon which the car turns. The point we wish to bring out, however, in this connection is that the velocity of a vehicle is a considerable factor in the destruction of all classes of roads, and that for a given type of tire the coefficient α will differ for each type of road.

RELATIONSHIP BETWEEN POWER AND RESISTANCE

Now that we have noted the effect of resistance to car velocity upon road surfaces, let us next look into the general relation of power to resistance. In Fig. 1 we plotted a curve which expressed the magnitude

Digitized by Google

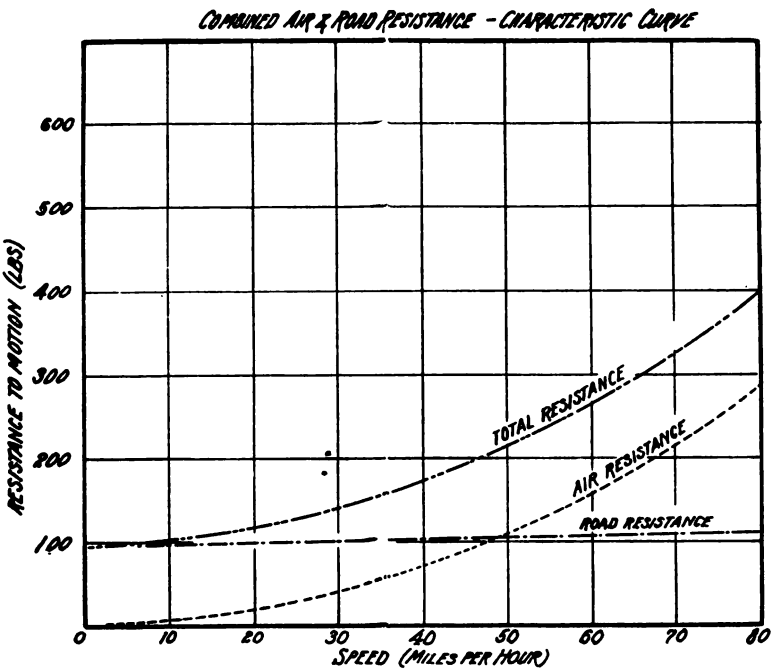

FIG. 8

of the force set up by the air resisting the passage of a vehicle moving at various speeds. In Fig. 3 we plotted a curve which expressed the magnitude of the force set up by the road surface resisting the passage of a wheel moving at various speeds. The total resistance encountered by the car is, therefore, equal to the sum of the two individual resistances. In both Figs. 1 and 3, the scale of abscissae and ordinates was the same, so that if we wish to express graphically the magnitude of the total resistance to motion of a moving vehicle, we may do so by plotting on the same scale of co-ordinates a curve, the ordinate of which at any given speed is equal to the sum of the ordinates for each of the characteristic curves at that same speed. Fig. 8 shows such a curve. The work by which we overcome the work due to total resistance, represented by the area under the combined resistance curve (Fig. 8) is nothing else than the work delivered at the rear wheels by the motor acting through the medium of the transmission system.

Suppose that we plot upon the same system and scale of co-ordinates, a curve, the ordinate of which at any given speed is equal to the magnitude of the force propelling the aforesaid vehicle. Then assuming that our horsepower is of constant magnitude it will be represented by a curve shown in Fig. 9.

Digitized by Google

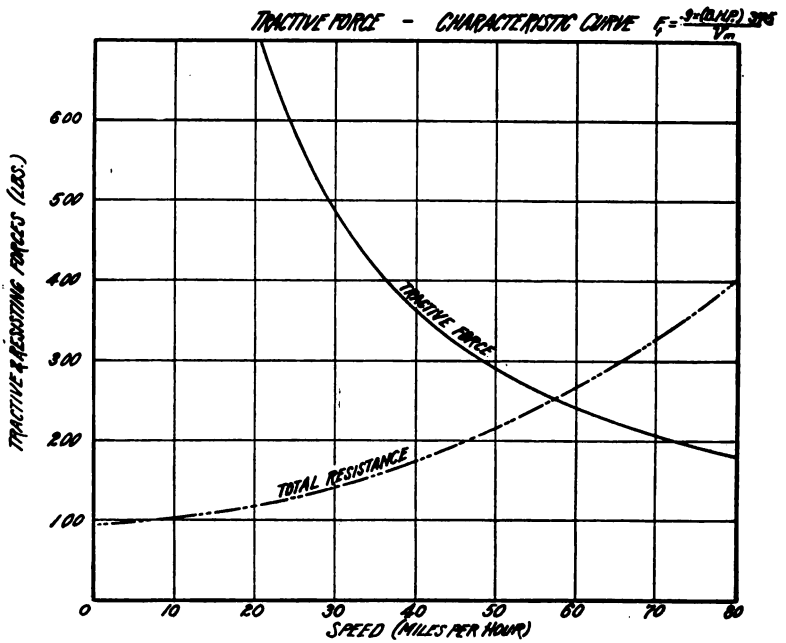

FIG. 9

As a means of comparing this latter with our total-resistance curve, let us superpose one upon the other, keeping our base line and origin coincident as in Fig. 10. Near the point of zero velocity the ordinates of the propelling-force curve are much higher than those of the total-resistance curve. The ordinates of the total-resistance curve, however, increase as we move toward the right until we finally reach a point at which the ordinate is equal to the ordinate of the propelling-force curve for that velocity.

The significance of this coincidence is that at this velocity the propelling and resisting forces are exactly in equilibrium, and that this velocity may be maintained but cannot be exceeded. If we consider a vehicle of the same mass as the one just mentioned, but impart to it a propelling force equal to only one-half that of the first body, then clearly the curve of propelling forces will intersect the curve of total-resisting forces at a point much nearer the zero velocity than was the case with the first body. Hence, maximum possible velocity is proportional to propelling force.

Should we wish now to pass from a consideration of propelling and resisting forces to a consideration of work required for propulsion and resistance, we may do so by comparing the areas under the plotted curves. From such comparison we shall see that from the point where the curves

Digitized by Google

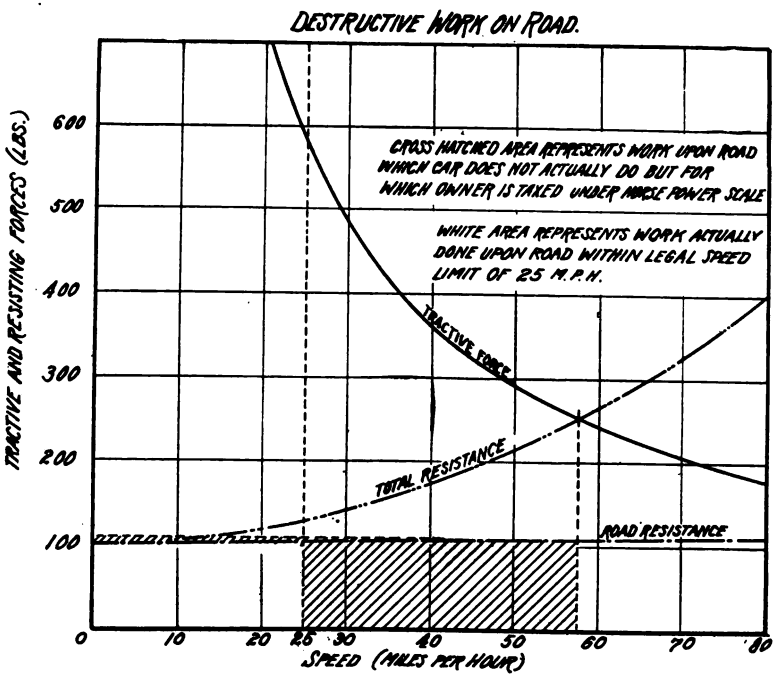

FIG. 10

of propulsion and resistance intersect, the velocity will remain constant and its product by the ordinate at that point will be equal to the power required to maintain that velocity.

SYSTEM APPLICABLE TO ANY VEHICLE

The moving vehicle which has been under consideration might be either an animal- or a mechanically-propelled vehicle, and still be susceptible to the same treatment, but of course the power and resistance curves would present different characteristics. As an example, Fig. 11 shows the curves for a horse-drawn vehicle and a motor car. In the case of the horse-drawn vehicle the only resistance which we have to overcome is the road resistance. The line representing the propelling force is a straight line parallel to the base line and its distance above it is proportional to the number of horses pulling upon the vehicle.

LEGAL AND PRACTICAL LIMITS OF VELOCITY

Nearly every State in the Union imposes a limit upon the speed at which a vehicle may travel over its roads. An average taken of the limits in thirty-eight States shows itself to be approximately 25 miles per hour.

In Vol. 1 of the S. A. E. Data Sheets is a table compiled by Mr. Churchward, giving ideal speeds in miles per hour for vehicles of various

Digitized by Google

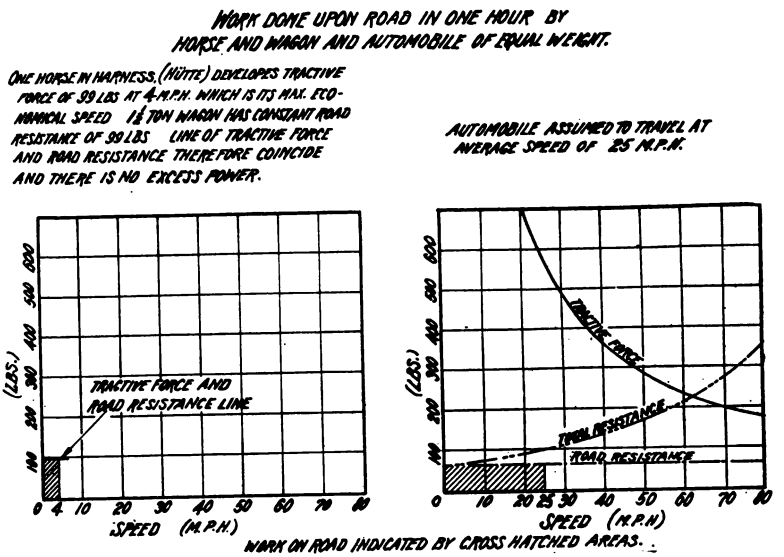

FIG. 11

weights. A prefixed note says: "Taking everything into consideration, that is to say, life of engine, transmission, tires and maintenance of vehicle as a whole, experience has shown that the following table of economic speeds is approximately correct."

The speeds given in that table are lower than the average of the State limitations. If we consider that on our graphical representation of road resistance and tractive forces, our lines represent average relative conditions of power to road resistance, it is clear that an average automobile has sufficient power to exceed speed limits fixed either by law or by general expediency regarding life and maintenance of car. The question naturally arises at this point, therefore, why should we, as is now the general tendency, tax a man in proportion to the power of his motor when actually he must not only break the law to use the full power for which he is taxed, but also must shorten the life of his vehicle by so doing. It is quite presumable that with efficient police regulation a man cannot habitually or with impunity exceed fixed speed laws. Moreover, looking at a motor car as a pleasure vehicle, it is doubtful if the occupants of a car derive any genuine pleasure or benefit from speeds in excess of 25 miles an hour.

Looking at the subject from all angles, then, it is very doubtful if a conservative man cares to drive his car at a higher average speed than 25 miles an hour, so that the average of road resistance which we must consider will be that encountered at that speed. But as we have previously stated, the destructive effect of a vehicle on the road at a given speed is measured by the resistance encountered at that speed; so that our measure

Digitized by Google

of the destruction which a car can cause to a road will occur at the legal speed which is 25 miles per hour.

Any road vehicle, then, should be primarily taxed in proportion to its road destructive power and hence in proportion to its road resistance at its allowable speed, and not at a speed in excess of that, even though the motor may be of sufficient horsepower to maintain a higher rate of speed.

HOURS PER DAY WHICH VEHICLES USE ROADS

It is not alone sufficient, however, that the vehicle should be taxed entirely in proportion to the Road Resistance. As is very evident, certain classes of vehicles use the roads a far greater number of hours per day, week, or month than do other classes, and the amount of work which they do in destroying roads is directly proportional to the relative length of time during which they are in motion on the roads.

The problem of determining an average of the number of hours per day spent by each class of vehicle on the roads is somewhat difficult. In this respect we will class vehicles under the heads of commercial and pleasure vehicles. Of the commercial vehicles, omnibuses use the roads the greatest number of hours per day. If we assume that they give continuous service (365 days per year) from six in the morning until nine at night, we shall be well within the actual limits of operation. This gives 15 hours per day during which they use the roads.

Motor trucks are the next in order of length of time per day, which, if we consider the average business day, will be about ten hours. Inasmuch as there are but about 300 working days per year, allowing for Sundays and holidays, the average as compared with omnibuses will be

$10 \times \frac{300}{365}$ hours, which makes a daily average of about 8¼ hours.

With pleasure cars the time factor is very indefinite. Let us assume that a man drives his car to and from his home and his place of business twice a day, and goes out for an hour's ride in the evening and spends about nine hours in his car on Sunday. The number of hours consumed in trips to and from work may be estimated at a maximum of 3 per day. Let us say that considering all seasons of the year, the man drives on an average one hour in the evening. Now adding in the 9 hours of Sunday driving we get a total of $18 + 6 + 9 = 33$ hours per week, and an average of 4¾ hours per day.

APPLICATION OF HOURS PER DAY FACTOR

If our assumptions have been approximately correct we must further modify our road resistance by discriminating between the different classes of vehicles, that is, omnibuses, trucks and pleasure cars in the proportion of 15, 8¼ and 4¾. That is to say, if we regard the tax rate for pleasure vehicles as the basic rate, the rate for trucks will be about 1¾ times the basic rate, and the rate for omnibuses 3⅛ times the basic rate.

In justice to the road builder it would be well to establish lower limits of speed for vehicles of excessive weight per square inch of tire

Digitized by Google

contact. This, in fact, has been done in some States, notably Massachusetts and New York. At just what point these limits should be established could be determined by experimental means.

GENERAL CONCLUSIONS

After one has scrutinized the superposed characteristic curves of power and resistance and grasped the significance of the area representing work at the right-hand side of the line of 25-mile per hour velocity, he cannot but understand what a comparatively small portion of the average horsepower of a motor is actually used in doing destructive work on the road. And understanding this fact it would be logical to give consideration to some tax system bearing a more direct relation to road destruction than does the horsepower scale.

Such a mode of taxation would in no wise work injustice either to the State or to the vehicle user and would tax the user in proportion to the total yearly road destruction of his car at legal speed. This road destruction could be calculated by some formula which takes into account the various items of weight, wheel diameter and type of tires.

While it is not entirely within the scope of this paper to derive such a formula, we may suggest one taking the general form here shown:

$$\text{Total tax} = \frac{W\alpha}{r} V_m \times K \times \text{Tax rate per unit.}$$

In this formula

W represents the total weight of car.

α = Coefficient of rolling friction.

r = ½ tire diameter.

V_m = Legal velocity in miles per hour.

K is a factor proportional to the average number of hours per day which a given type of vehicle uses the road relative to the standard type on which the tax rate is based.

The value of α should be determined only after a series of exhaustive experiments.

To bring out more clearly the radical differences between the two systems of taxation, let us take a practical example.

Suppose we consider a touring car and a medium-capacity truck. The monetary value of each is about the same. The touring car has a motor of the same bore, stroke and number of cylinders. The touring car has pneumatic and the truck solid tires. Under the horsepower scale both vehicles pay the same tax. If they travel over a road at the same rate of speed, however, it is hardly probable that they do the same amount of damage, and yet for this damage both must pay equally.

On the other hand, if we taxed each vehicle in proportion to the destruction each might cause to the road, each pays only for its share of the destruction.

Which system of taxation appears then to be more logical; the one based on horsepower or the one based on destructive power?

Digitized by Google

DISCUSSION

CHAIRMAN ZIMMERSCHIED:—I think a careful perusal of this paper will convince you all that it has a great deal of meat in it and brings before us clearly a subject which we have had with us in one form or another for a long time, and about which there is almost as much difference of opinion as there is between the adherents of the one- and the two-wire systems. The various legislative bodies are waiting for a simple yet universal engineering basis on which to build taxation laws, and it seems to me that this organization should lead in the working out of such a basis. It is a question which has such wide ramifications that it needs a body of men with varied experiences and resources to handle it. I think we all agree that the basis of road destruction is much better than one of horsepower, but to arrive at a good working method of determining the road destruction factor of any vehicle is another matter and quite a complicated one; it should, however, be attacked with all aggressiveness by this body.

CORNELIUS T. MYERS:—I would like to make one suggestion. The term alpha represents the coefficient of rolling friction, so that the poorer the road the larger tax must be paid if computed with this formula. It seems to me that the term alpha ought to go below the line. Some effort should certainly be made to determine the destructive effect of horse-drawn traffic, the immense wear due to the narrow buggy tire, and the result of five hundred pounds per horse's hoof coming down at a pretty fair rate on a very small area. Some experiments made in Massachusetts demonstrated that for equal tonnage over a road, the destructive effect of motor trucks was much less than of horse-drawn vehicles; this certainly ought to be taken into consideration.

Another point is that of velocity. The term V_m represents the velocity in miles per hour. In comparing the motor truck with the pleasure car it seems that the latter is favored unduly, because the destructive effect on the road is much more likely to be proportional to the square of the velocity, and not to the velocity of the first power, as suggested. Of course, the whole subject is a matter of suggestion and reliable data must be collected before any just formula can be worked out.

R. McA. LLOYD:—We should not lose sight of the fact that the tendency of legislatures is to tax luxuries rather than commodities. I doubt very much if it is wise or practicable to tax trucks according to a mathematical formula that is consistent with a tax on pleasure vehicles. The tax on a truck becomes eventually a tax on a commodities, because the cost of commodities includes the cost of transportation. It seems to me that there will be an increasing tendency to relieve the commercial vehicle from taxation and put the taxation on the pleasure vehicle, which is more or less of a luxury. Personally I am in favor of that.

We should remember that in a great many states it is unconstitutional to levy a tax on anything but the valuation basis; that may be the case more in the future than it has been in the past. In New York State the tax to which we submit is really unconstitutional. It is not called a tax,

Digitized by Google

but a license fee. All conditions would be better met if the tax were based on valuation, and possibly the large, luxurious cars were made to pay it. Eventually the taxes fall on everybody; it makes no difference who pays them; we all pay them in the end.

CHAIRMAN ZIMMERSCHIED:—While the points made by Mr. Lloyd are very good, he has brought in perhaps more of what is desirable from the legislative point of view than what this body should take into consideration. What we must do is to furnish an accurate engineering formula and then let the legislators tack on the legal and economic features of a taxation statute.

A. P. BRUSH:—Would it be within the province of the Society to help to avoid futile and inadvisable legislation, by making up what we believe to be the most accurate possible expression of the road destructive effects of the different classes of self-propelled vehicles, appointing a committee for the purpose of submitting to the Society such a formula in its most workable form?

C. T. MYERS:—I move that a committee of the Society take this matter under advisement and report what they consider an equitable engineering basis for submission to the various legislatures, for the taxation of vehicles.

(The motion was seconded.)

CHAIRMAN ZIMMERSCHIED:—We are starting on a broad subject and just what we want to do should be understood very clearly before we go too far.

A. P. BRUSH:—I suggest that we confine ourselves to an attempt to originate a formula which will deal not with the ethics of the case, but solely with the probable average, relative road destructive effect of the different classes of vehicle. That is something within the bounds of accomplishment, and about as far as the Society ought to attempt to go. If we go further, we will get into discussions that will reduce the value of what we may contribute.

CHAIRMAN ZIMMERSCHIED:—That is, Mr. Brush, you believe in starting on one of the factors of the question first, a strictly engineering factor?

A. P. BRUSH:—Yes, the most workable possible scientific formula.

CHAIRMAN ZIMMERSCHIED:—Mr. Myers, do you accept this amendment?

C. T. MYERS:—Yes.

CHAIRMAN ZIMMERSCHIED:—You have all heard the motion. Is there any further discussion? Those in favor of the motion please say "aye"; contrary, "no." It is carried.

I think this is the beginning of another great and good work of the Society.

Digitized by Google

TAP DRILL SIZES AND CAUSES OF STRIPPED THREADS

By H. E. Harris

There are many arguments in favor of a tap drill list which can be applied to commercial practice. All tables which have ever come to the writer's notice have been incorrect from a practical standpoint, as they either gave a 100 per cent. depth of thread or have approximated it. They were evidently figured out very conscientiously by someone who never had to tap holes. But a worse condition than having a tap drill list that should not be followed, is to have someone who ought to know better insist that a table be followed because it is given in some handbook; that it must be right in spite of torn threads, broken taps, half reamed out holes, etc.

EFFECT OF USE OF IMPRACTICABLE DRILL LISTS

One factory labored under such a condition for a long time, all tap drill holes in the jigs being made religiously wrong, that is to give a 100 per cent. thread according to the table properly issued and approved, and the condition was not changed until after a couple of years' work between a liberal-minded chief inspector and the tapping and screw-machine departments, during which time an unofficial table, allowing a depth of thread varying from 45 to 80 per cent., to meet different conditions, was made up and all tap drill holes redrilled free-hand sub-rosa in the tapping department to these sizes and the results carefully watched. Before this there had been much trouble because the operators would redrill the holes on their own responsibility and often get them much too large.

A confession of the deviation from orders was made and the matter was put up for revision. A thorough investigation was made and the findings were that no fault could be found with the results, and that the tapped work was better and less expensive, even with the extra redrilling operation. The table that had been evolved and corrected was then adopted, and the tool room was soon busy changing the drill bushings in the jigs to provide the proper tap drill sizes.

TENDENCY TO REAM INSTEAD OF TAPPING

A tap to start into a hole must not only cut but lead itself in. In Fig. 1 is shown a portion of one land of a tap in a hole which would leave a 75 per cent. thread after tapping. The point of the tap is made slightly smaller in diameter than the tap drill hole. The tap cuts successive chips at A, A', A'', A''', until the full thread is produced. The resultant force required to send the tap through the work is a combination of a rotary force to cut or ream the chips out and a forward thrust force to guide the tap ahead as it cuts the thread. The first of these forces is supplied by the tap wrench or machine spindle; the second, except in a few rare cases, should be supplied by the tap itself after the first initial

Digitized by Google

"bite." This is, the surfaces *B, B′, B″, B‴* in Fig. 1, are non-cutting and by their resistance to the backward thrust of the tap should convert part of the rotary force into a force to carry the tap forward. Obviously, if for any reason surfaces *B* are inadequate, the tap will not be carried ahead, but will ream.

With a 75 per cent. depth of thread the surface *B* is backed up by a broad section and as the tap in the walls of the thread has no clearance to the cutting edge, the surface *B* acts as an efficient guide and carries the tap ahead as it cuts.

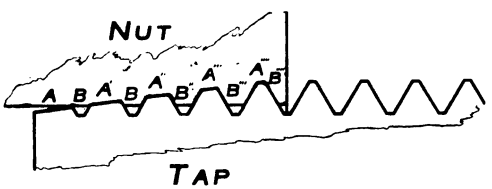

Fig. 1—Tap land in 75 per cent. Tap Drill Hole.

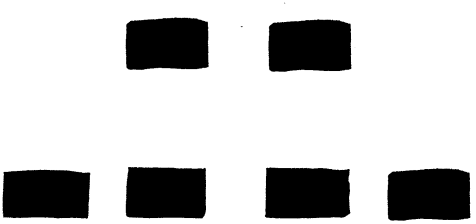

Fig. 2—Reaming by tap caused by too small tap drill hole.

WHY TAPS REAM AND "STEP" WITH 100 PER CENT. THREAD

Fig. 2 shows cases where nuts have been reamed by the tap because of a too small tap drill hole, and Fig. 3 shows the appearance of a "stepped" thread from the same cause. With a full or 100 per cent. depth of thread the resistance to the rotary force is much greater as the area of the chip removed, as shown in Fig. 4, is 64 per cent. greater, the profile of the 100 per cent. and 75 per cent. being plotted off into triangles numbered to show the relative areas.

In addition to this the leading or guiding surfaces at *D, D′, D″, D‴*, for a 100 per cent. thread, as shown in Fig. 5, are much narrower and weaker at the starting of the tap, and the end of the tap is apt to act as a taper reamer and cut off these slight projections, thereby depriving

Digitized by Google

the tap of its ability to lead itself into the work. This shows how unfavorable to good threading a 100 per cent. depth of thread is, if only this one condition, viz., greatly increased resistance to the forward travel of the tap and the greatly decreased leading ability alone, are considered with the attendant reaming and "stepping" of the threads.

OTHER DISADVANTAGES OF 100 PER CENT. THREAD

Trouble is not experienced from these results alone; torn threads are obtained from taking too heavy a chip; the tap meeting such resistance to forward action is pushed back and will cut short lead and narrow threads with wide spaces. Also the metal, having no space to flow at the apex of the threads, will cause a binding of the tap in the threads which have no clearance in the wall surfaces at this point, causing the metal to become torn and often binding and breakage of the taps. Fig. 6 shows actual results in nuts which were caused by tapping into a 100 per cent. tap drill hole. You will note that these nuts are stepped torn,

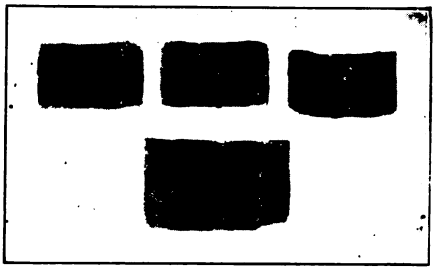

Fig. 3—"Stepped" thread, result of undersize Tap Drill.

and even "crossed" where the tap lost its initial bite, and caught a second time before tapping through the nut.

OTHER FACTORS THAN DEPTH OF THREAD OF MORE IMPORTANCE FROM STRIPPING STANDPOINT

Torn, crumbled, crossed, reamed and stepped threads are all prolific causes of stripping, and when produced with properly made taps are generally due to too small tap drill holes. There are, however, other factors that are greater causes of stripped threads. Threads that are imperfect on the angle, being less than 60 degrees or hollow, thereby having a weaker section, increase the tendency to strip; threads that have too great a difference in pitch diameter sizes reduce the effective triangular area of the thread and thereby its resistance to stripping; an error in lead, although not generally so considered, is one of the most frequent and unsuspected causes of stripped threads.

ERRORS IN LEAD NOT ABSOLUTELY AVOIDABLE

The effect of errors in lead on the stripping of threads is very marked. Commercially it is practically impossible to avoid minute

Digitized by Google

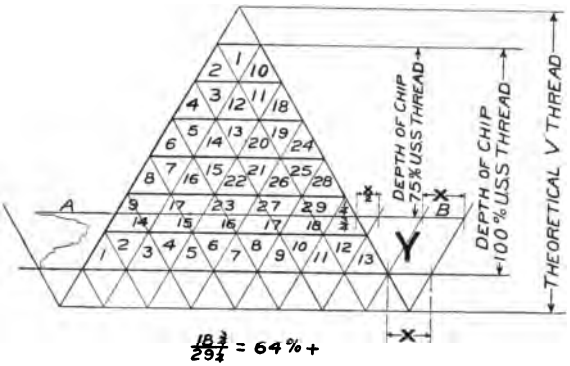

Fig. 4—Proportion of areas of chip in 75 and 100 per cent. threads.

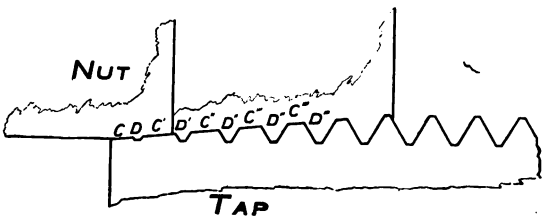

Fig. 5—Weak leading ridge in 100 per cent. thread.

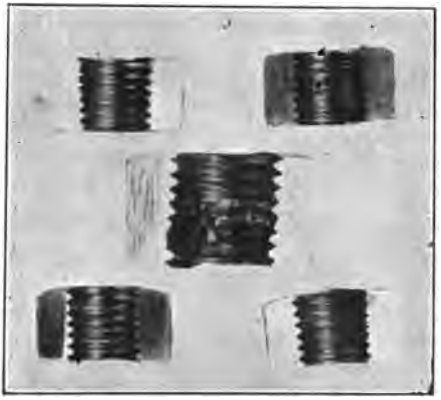

Fig. 6—Stepped, torn and crossed threads; 100 per cent. Tap Drill Hole.

Digitized by Google

errors in lead. A dull die as it becomes duller tends to cut a shorter lead, that is the normal number of threads per inch occupy less length than one inch. Likewise a tap will cut an incorrect lead, although the spacing of its own teeth may be practically perfect if it is improperly made or if the tap drill hole is too small.

IMPOSSIBLE TO DETECT ERRORS IN LEAD WITH ORDINARY GAGES

The ordinary way of measuring threads is to test the work by gaging the hardened plug or ring thread gages, as shown in Fig. 7. When these are home-made they are apt to be incorrect, due to lack of precision machinery to generate a correct lead and also to irregular and inadequate methods of hardening. In addition, it is practically impossible to tell whether there are any errors in lead by this method even though the gage be correct. In this way of gaging, which is slow and laborious, the gage is screwed onto the piece, and the screw diameters reduced by closing in on the die until the gage will screw on all the way. For each 0.001 inch error in lead, per inch, with a thread gage one inch long, the pitch diameter has to be reduced 0.0017 inch, irrespective of the number of threads per inch. In this way, by a few thousandths error in lead, threads are produced which soon become loose because the original fit is only on the end threads.

EFFECT OF ERRORS IN LEAD ON FIT

Fig. 8 shows this effect of error in lead. A difference in diameters of the screw and nut has to be allowed, and yet the screw is tight in the nut, binding at *A, B, C* and *D*. These points, however, soon wear or upset, resulting in a loose fit.

WHY ERRORS IN LEAD SOMETIMES CAUSE STRIPPING

Not only in this way do we lessen, by looseness and decreased effective thread area, the shear-resisting strength, but if the lead on the screw is long *i. e.*, if the normal number of threads per inch occupy more than an inch), or if the lead in the tapped hole is short, or if both these conditions exist together, or if, in any combination of errors, the lead of the screw is longer than the lead of the nut or tapped hole, we have an ideal condition for stripping. In other words, such conditions provide what is termed a "shear cut" by blanking and shearing machinery builders.

EFFECT OF LEAD ON SCREW BEING LONGER THAN LEAD OF TAPPED HOLE

Fig. 9 will make this clear, with the following explanation: Here we have contacts at *A, B, C* and *D*. The thread at *A-B* in the nut takes the entire strain of the screw as it is tightened and that at *D-C*, being on the opposite side from the pressure, tends to open as the screw is tightened. The tendency of the strain concentrated at *A-B*, instead of over all the thread, is to strip or upset and weaken the thread at this point. A continuation of the tightening operation would extend the stripping action progressively along the helix, with a shearing action as shown graphically by the diagram in Fig. 9. Thus it is

Digitized by Google

Fig. 7—Ring and plug thread gages.

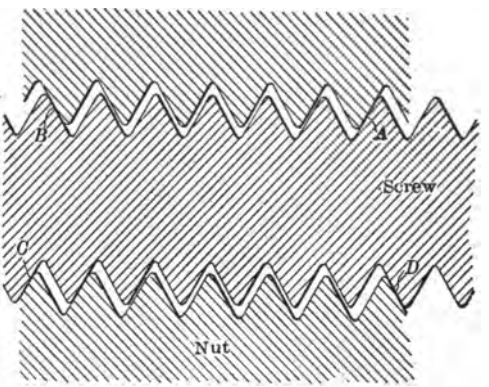

Fig. 8.—Diameter of screw reduced on account of error in lead.

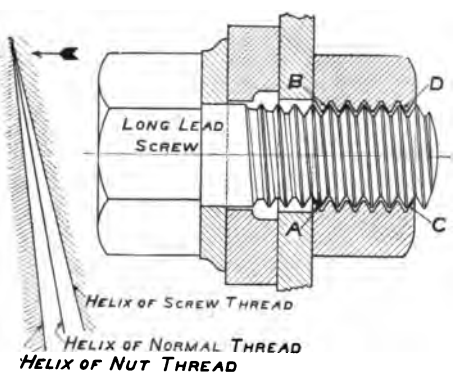

Fig. 9.—Long lead screw with short lead tapped hole and diagram of shearing action

Digitized by Google

seen that errors in lead not only affect the diameter sizes and the overlap and are thus vital factors in the fit and strength of the thread, but that they are also apt to furnish the very best means for shearing or stripping threads that could be planned. More vital then is proper measuring or gaging of threads to see that the lead is correct and the pitch diameter of the screw up to size than the mere matter of testing the threads with a threaded gage, which only insures that they screw together no matter how inaccurate they are.

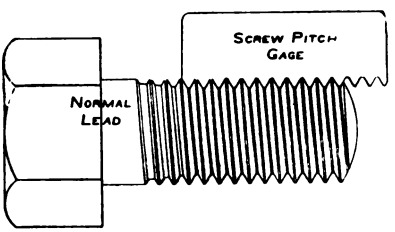

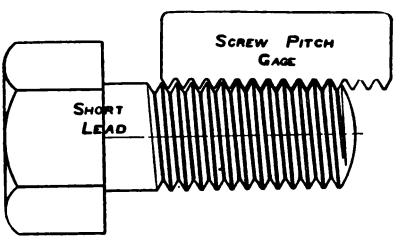

Fig. 10.—Screw pitch gage checking normal thread.
Fig. 11.—Screw pitch gage rejecting short lead

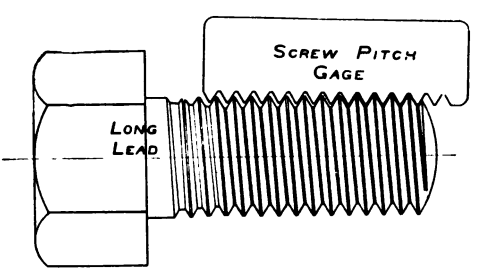

Fig. 12.—Screw pitch gage rejecting long lead

TO MEASURE LEAD SIMPLY AND WITH COMMERCIAL ACCURACY

A simple and inexpensive means for measuring the lead of threads is rapidly coming into general use. I refer to the gages shown in use in Figs. 10, 11 and 12. These gages are very accurate and with little practice an inspector or operator can detect such slight errors as .002" per inch, and detect instantly whether the lead is short or long. In Fig. 10 normal lead is proved. Fig. 11 shows how readily a short lead screw is detected. In Fig. 12 a long lead screw is shown. The difference between this and the two former figures is very apparent.

Digitized by Google

TO MEASURE PITCH DIAMETER AND HOLD IT WITHIN LIMITS

In order to measure the pitch diameter separately rather than screw it blindly into a threaded hole gage, another simple and yet accurate form of gage is now widely used. That is the fork limit thread gage shown in Figs. 13, 14 and 15, which are self-descriptive. This gage not

Fig. 14.—Just right; the screw has passed the upper points but hangs on the bottom points

Fig. 13—Too large; the screw will not pass the upper points.

Fig. 15—Too small; the screw has passed both sets of points.

only permits the rapid inspection of threaded work (from 500 to 1,000 per hour), as its conical points are correctly ground and fit the angles of the thread, but it checks the angle, allows the proper working limits and is tamper- and fool-proof. It will work under conditions of oil, dust, chips, etc., with accurate results.

Digitized by Google

CONTROLLING ERROR IN LEAD TO PRODUCE BENEFICIAL RESULTS

As stated, it is practically impossible to eliminate all errors in lead in screw and tapped hole. How, then, will gages help us? And how can we avoid all the serious trouble pointed out? By gaging and careful selection of threading tools and machinery we can first get the work as accurate as practicable; and then, by confining the unavoidable commercial errors by allowing tolerances on the right side of the normal line, we can avoid upsetting, shearing and stripping.

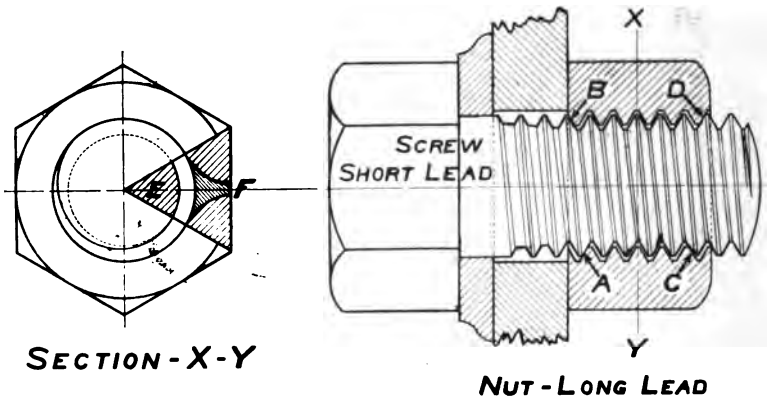

Fig. 16.—Relative strength of nut and screw and correct combination of short-lead screw with long-lead nut

I will use Fig. 16 to illustrate this. At the bottom, section *X-Y* through the screw and nut shows the relative sectional strength. The area of 1/6 of the screw at *E* is seen to be contained at least three times into the cross-section of the nut at *F*. We can therefore safely assume the stronger nut to be absolutely inelastic under any strains applied through the medium of the weaker screw. Referring to the right-hand view we have a screw with a *shorter* lead than the nut and coming in contact when the screw is tightened, at *C-D*. As the screw is drawn further to a seat the other portions of the thread also come into contact, with the elasticity and elongation of the screw, until the full length of the thread, including portion *A-B*, is fully in contact. *This condition would really seem more ideal than to have the threads absolutely perfect in lead,* as we utilize the elasticity of the screw to aid in distributing the pressure over the entire length of the thread contact, rather than have it fall on portion *A-B* alone.

SCREW LEAD SHOULD BE "SHORT" TAPPED, HOLE LEAD "LONG"

In other words, good thread work must be governed by the rule that the lead on screws should never be longer than the normal and the lead on tapped holes should never be shorter than the normal.

Digitized by Google

DEEP OVERLAP NOT CONSIDERED NECESSARY

Passing from some of the most prolific causes of stripped threads, we will take up the matter of overlap. The time was when sharp V threads were used in order to get as much overlap as possible (?). This is questioned because it is mechanically impossible to produce a theoretically sharp V thread. The Sellers form of thread was demonstrated before the Franklin Institute to be more effective and stronger than the V thread and adopted as the United States standard. This form of thread is specified in S. A. E. Screw Standard and in the International Standard. The use of the U. S. *form* of thread is yearly making great gains over the other forms and nobody seems to find any ill effects from decreased overlap.

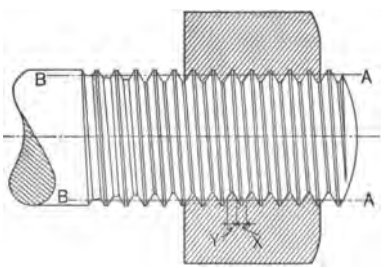

Fig. 17.—Greatest shear-resisting strength in threads.

The English in the British and Whitworth forms have not only a lesser depth of thread but still further decrease the effective overlap by rounding off the tops and bottoms of the threads. They have not sacrificed strength in this case, for the decreased overlap does not decrease the shear-resisting strength of the thread; and the rounding at the base furnishes a reinforcing filler to stiffen the thread. I am not advocating the English thread, however, as the rounded form, in my opinion, has too many disadvantages to rank with the U. S. form; but wish to drive home the argument that greater overlap has not been considered generally conducive to shear-resisting strength.

SUFFICIENT OVERLAP

Then what constitutes sufficient overlap? It is the opinion of many capable men, after a study of the theoretical side of the matter and extensive practical tests, that sufficient overlap is had by retaining that portion of both the screw thread and the nut thread which, in combination, offers the greatest resistance to shear obtainable, enough extra metal being allowed to prevent a spinning-over or burring action.

DIFFERENCE IN PITCH DIAMETERS MORE DANGEROUS THAN SMALL OVERLAP

Overlap as a factor to resist stripping is not nearly as important as proper fit on the pitch diameter. When there is considerable differ-

Digitized by Google

ence between the pitch diameters of the tapped hole and screw, whether from incorrect gaging, or to allow for errors in lead, or because of poorly made or off-size taps and dies, the section of the thread is weaker where the combination of the greatest strength is made and the tendency to burr over and strip thereby greatly increased.

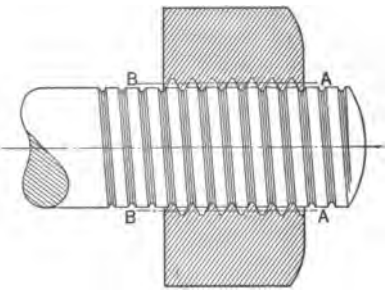

Fig. 18.—Shear-resistance minimized by removal of area of greatest strength on screw threads.

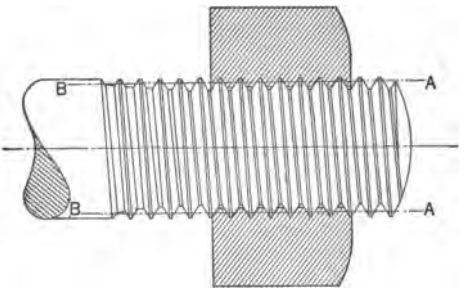

Fig. 19.—Greatest shear-resisting strength retained in 75 per cent. depth of thread in tapped hole

ILLUSTRATION OF DIFFERENT AMOUNTS OF OVERLAP

In Fig. 17 we have the greatest resistance to shearing approximately along the pitch diameter lines *A-B,* where portion *X* on the screw has the same width as *Y* on the nut.

In Fig. 18 the shear-resistance of the screw alone is very great but limited by the small section of support at the tops of the thread in the nut.

In Fig. 19 the U. S. form of thread is shown. A glance will convince those familiar with screw-thread work that there is more than sufficient overlap, and yet the thread in the nut has 25 per cent. of its

Digitized by Google

depth removed from the tops of the threads; there is more than sufficient extension beyond the pitch diameter lines *A-B* to prevent any burring action. This thread has a wide margin of strength over the power necessary to cause the screw to elongate and fail through its root diameter section.

WHY 75 PER CENT. DEPTH OF THREAD IS RECOMMENDED

Seventy-five per cent. depth of thread is more desirable than 100, because, in addition to improved threading, it results in a vast reduction of breakage of taps. A common saying in regard to taps is that 90 per cent. break instead of wearing out. This is doubtless at least approximately true in average tapping practice. This means not only large tap expense but expensive delay in getting new taps and resetting machines, and, not least by any means, the costly processes used with occasional success to remove broken taps and the expensive pieces rendered useless by having broken tap-ends left in or having the tap holes spoiled in the attempt to remove the taps. This waste is almost altogether unnecessary and can be easily avoided by properly designed taps and proper sizes of tap drill holes.

Factors of Safety

Material	Factor of Safety 75% Tap Hole	100% Tap Hole
Drawn Brass	19	7
Cold Punched Hexagon Nuts	8	3
Drawn Screw Stock	8	3
Drawn Phosphor Bronze	5	1
Crucible Tool Steel 1.25% Carbon	4	0.5

Lubricants: Lard or Sperm Oil
United States Standard Thread Taps
kept in commercially sharp condition.

Fig. 20.

MAKING STRONGER AND EASIER CUTTING TAPS

Large sums have been expended in our testing room on experimental work, developing a tap so designed as to have correct cutting angles, plenty of chip clearance where most needed, and increased strength at the portions of greater strain, as shown by the place of the majority of fractures in broken taps, throughout the different tests and in general shop practice. By making careful research in the matter of improved steels and heat treatments to conserve the elements of elasticity, strength and durability of cutting edges, and by strengthening the taps at vital points and making them cut easy and without clogging, taps were produced which would stand up much longer than theretofore.

Digitized by Google

FACTOR OF SAFETY OF TAPS

The average factor of safety of taps is usually considered as 2, although a great many taps have none at all in a 100 per cent. hole. The design of tap referred to above has a factor of safety of *at least* 3, when tapping a *full thread* in open hearth machinery steel.

By tapping into a tap hole that will have a 75 per cent. thread, the factor of safety of all taps is materially increased. An average of a large number of tests shows conservative factors of safety in different materials as shown in the table given in Fig. 20. These figures are for the U. S. S. threads. It is reasonable to believe that the S. A. E. thread taps, due to the much finer thread in proportion to diameter, would have a larger margin of safety.

PROPER LUBRICATION RAISES FACTOR OF SAFETY

The table represents what can be expected under proper conditions. Poor lubricant or absence of lubricant will cut down tap efficiency 50 to 100 per cent. To save unnecessary repetition, the writer would refer those interested in the matter of lubrication to the paper entitled Taps and Screws presented before the American Society of Mechanical Engineers, March 12, 1912; which illustrates the different forms of cutting edges for taps, comparing proper and improper forms, and giving results obtained; and discusses the value of angle accuracy in threads, the effect of warped taps upon work, the powers required in tapping different materials, the indication of tapping efficiency by the form of chip produced, and the cause of chattered threads.

ENDORSEMENT OF 75 PER CENT. DEPTH OF THREAD

The recommendation of a 75 per cent. depth of thread in a tapped hole as standard practice has received the endorsement of many large users, the General Electric Company for one using practically this allowance, having arrived at its use in their own practice. The writer evolved a table of tap drill sizes which, after a series of trials and experiments covering a couple of years and considerable consultation with tap makers, screw machine and tapping department heads, assemblers, inspectors and engineers, was finally adopted by the Western Electric Company, and gave complete satisfaction under their conditions. In this table of sizes, which applied to tap sizes of one-half inch diameter and less, the different materials were taken into consideration on the principle, verified by actual and continued practice, that different materials give different results in tearing, spinning and crumbling at the tops of the thread, according to whether their nature is stringy as in the case of copper or brass and steel for drawing purposes, or easy cutting and ductile, as in the case of leaded brass, or crystalline and apt to crumble at the tops of the thread as with cast iron and cast aluminum, or elastic as in the case of hard rubber, which will expand under the heat of drilling so as to actually permit cutting a whole which, after withdrawal of the drill and cooling, is several thousandths smaller than the drill used.

Digitized by Google

RELATION OF DEPTH OF TAPPING TO TAP DRILL SIZE

The depth of the tapped hole was also taken as a factor, on the basis that holes are generally tapped no deeper than necessary, and that the deeper holes indicated a longer thread contact with the screw and therefore greater shearing strength and less liability of stripping. By using a larger drill size in the deep holes, the amount of work for the taps was decreased and the chips were of less bulk and consequently the tendency to clog and break the taps was greatly reduced.

Materials	Depth of Tapping	Depth of Thread
Cast Aluminum	Equal or less than ½ (O. D. of Tap)	80%
Leaded Brass	....	....
Cast Iron	More than ½ (O. D. of Tap) but less than 2 (O. D. of Tap)	66%
Screw Stock	....	....
Soft Steels	More than 2 (O. D. of Tap)	50%
Tough Steels	Equal or less than ½ (O. D. of Tap)	66%
High Carbon Steels	....	....
Alloy Steels	More than ½ (O. D. of Tap) but less than 2 (O. D. of Tap)	55%
Norway Iron	....	....
Copper	More than 2 (O. D. of Tap)	45%
Phosphor Bronze	....	....
Drawn Aluminum	....	....
Hard Rubber	....	....
Hard Fibre	....	....
High Brass	....	....

Fig. 21.—Basis for computing tap drill sizes in different materials for electrical apparatus work

PERCENTAGE OF THREAD FOR DIFFERENT DEPTHS AND MATERIALS

Fig. 21 gives the basis on which these tap drill sizes were counted. Its adaptability to tap sizes of more than one-half inch diameter, and on work other than electrical apparatus work, should be determined by test and trial before adoption. It is given here merely as an example of what has been done successfully in a certain case and bears on the matter in hand only as an argument for the adoption of rational tap drill sizes.

Digitized by Google

DRILLS FOR MACHINE SCREW TAPS

Size No.	Threads per Inch	Root Diameter	Drill Size	Size No.	Threads per Inch	Root Diameter	Drill Size
0	80	.044	.048	9	24	.123	.136
1	72	.055	.060	10	32	.149	.160
1	64	.053	.058	10	30	.147	.158
2	64	.066	.071	10	24	.136	.149
2	56	.063	.069	12	28	.170	.181
3	56	.076	.082	12	24	.162	.175
3	48	.072	.079	14	24	.188	.201
4	48	.085	.092	14	20	.177	.193
4	40	.080	.088	16	22	.209	.224
4	36	.076	.085	16	20	.203	.219
5	44	.095	.103	18	20	.229	.245
5	40	.093	.101	18	18	.222	.240
5	36	.089	.098	20	20	.255	.271
6	40	.106	.114	20	18	.248	.266
6	36	.102	.111	22	18	.274	.292
6	32	.097	.108	22	16	.265	.285
7	36	.115	.124	24	18	.300	.318
7	32	.110	.121	24	16	.291	.311
7	30	.108	.119	26	16	.317	.337
8	36	.128	.137	26	14	.305	.328
8	32	.123	.134	28	16	.343	.363
8	30	.121	.132	28	14	.331	.354
9	32	.136	.147	30	16	.369	.389
9	30	.134	.145	30	14	.357	.380

Fig. 22

DRILLS FOR U. S. STANDARD TAPS

Size No.	Threads per Inch	Root Diameter	Drill Size	Size No.	Threads per Inch	Root Diameter	Drill Size
$\frac{1}{4}$	20	.185	.201	1	8	.838	.878
$\frac{5}{16}$	18	.240	.258	$1\frac{1}{16}$	8	.900	.941
$\frac{3}{8}$	16	.294	.314	$1\frac{1}{8}$	7	.939	.986
$\frac{7}{16}$	14	.345	.368	$1\frac{3}{16}$	7	1.002	1.048
$\frac{1}{2}$	13	.400	.425	$1\frac{1}{4}$	7	1.064	1.111
$\frac{1}{2}$	12	.392	.419	$1\frac{5}{16}$	7	1.127	1.173
$\frac{9}{16}$	12	.454	.481	$1\frac{3}{8}$	6	1.159	1.213
$\frac{5}{8}$	11	.507	.536	$1\frac{1}{2}$	6	1.284	1.338
$\frac{11}{16}$	11	.569	.599	$1\frac{5}{8}$	$5\frac{1}{2}$	1.389	1.448
$\frac{3}{4}$	10	.620	.652	$1\frac{3}{4}$	5	1.490	1.555
$\frac{13}{16}$	10	.683	.715	$1\frac{7}{8}$	5	1.615	1.680
$\frac{7}{8}$	9	.731	.767	2	$4\frac{1}{2}$	1.711	1.783
$\frac{15}{16}$	9	.793	.829				

Fig. 23

Digitized by Google

DRILLS FOR S. A. E. TAPS.
(Formerly A. L. A. M. Standard)

Size No.	Threads per Inch	Root Diameter	Drill Size
1/4	28	.204	.215
5/16	24	.258	.272
3/8	24	.321	.334
7/16	20	.373	.389
1/2	20	.435	.451
9/16	18	.490	.508
5/8	18	.553	.571
11/16	16	.606	.627
3/4	16	.669	.689
7/8	18	.803	.821
7/8	14	.782	.805
1	14	.907	.930
1 1/8	12	1.017	1.044
1 1/4	12	1.142	1.169
1 3/8	12	1.267	1.294
1 1/2	12	1.392	1.419

Fig. 24

TABLES OF TAP DRILL SIZES

The Wells tables of tap drill sizes—Fig. 22 for machine screw sizes, Fig. 23 for U. S. standard threads and Fig. 24 for S. A. E. threads—are safe and practical and have a wide margin of safety, as has been shown by repeated tests. They give a 75 per cent. thread, whereas a ½-inch 13 soft brass nut of ordinary length with but 50 per cent. thread when screwed onto a chrome vanadium steel bolt will, in a tensile strength testing machine, cause the bolt to part across the root of the thread without upsetting or stripping the threads in the nut. The use of these materials in this combination represents almost the extreme conducive to stripping.

IMPORTANT TO USE EXACT SIZE DRILLS.

As the ordinary size drills, known by number or fractional size, do not coincide with the correct decimal size given in the table, and in some cases do not even approximate them, and because a few thousandths variation towards a smaller hole is expensive, due to the increased percentage of tap breakage and a variation towards a larger size may be objectionable, we have been compelled to stock a complete line of decimal size tap drills. With the drill size stamped on the tap, the only excuse for error disappears. We feel that this will become standard practice as soon as the users and tap and drill makers awake to a realization of what constitutes correct and economical thread practice. We strongly urge strict adherence to the decimal sizes. Amer-

Digitized by Google

ican drill makers now furnish their European trade with decimal size drills (metric) up to approximately 1½-inch diameter; among the smaller sizes of these drills the steps are as small as approximately 0.002 inch. The drill makers have already suggested that the metric size drills be used as tap drills in this country, but this is untenable unless we are prepared to also adopt the metric system throughout, including metric taps and metric micrometers.

DISCUSSION

CHAIRMAN ZIMMERSCHIED:—I think Mr. Harris has furnished a very good starting point for the Research Division to consider in its work on recommended practice in the matter of tap drill sizes. The troubles in tapping holes are considerable, from other angles than those of the size of the drill and the material, the condition of the tap and such things.

A. P. BRUSH:—Is seventy-five per cent. depth of thread a fair average or does Mr. Harris suggest something further? Why not suggest an unsymmetrical thread that is nearer the size on the exterior of the thread than on the bottom?

H. E. HARRIS:—In a 100 per cent. hole there is a spinning action in almost all, if not all, metals. The root diameter of the tap has no clearance and it rubs. If you do not leave a little space there for the metal to flow, binding action will develop and some of the metal be rubbed and torn and rolled up in the flutes of the tap, which will break. It is very desirable to have clearance between the root diameter of the tap and the root diameter of the tap hole. Possibly twenty-five per cent. is not always needed; ten per cent. may be enough. I do not mean that we can use a ninety per cent. depth of thread in a tapped hole with manufacturing results equal to those obtained with a seventy-five per cent. depth, because it is a question of the amount of metal removed. But I mean that to eliminate the binding and further strengthen the tap, we might make the root diameter of the tap, were seventy-five per cent. depth of thread adopted as standard practice, fifteen per cent. oversize, leaving ten per cent. for clearance. We followed this principle on our "V" standard taps. We make our "V" standard taps with a generous width at the bottom of the threads, for the purpose of strengthening the tap; that is, "V" taps are made practically sharp at the top or apex of the thread, but flat similarly to U.S.S. threads at the bottom, thus making them larger and stronger at the root diameter.

Digitized by Google

THE IDEAL AUTOMOBILE

SCIENTIFICALLY CORRECT DISTRIBUTION OF MATERIAL

By Alanson P. Brush
(Member of the Society)

I am glad of the opportunity to use this title for a paper before a general meeting of our members. Probably there is no designer present who has not, at some time in his experience, been asked to design an absolutely ideal automobile and probably been helped (?) by being given a mass of ideal (?) automobile specifications, that have been very kindly (?) secured for him by the sales organization.

The ideal automobile is a ghost that we ought to lay; it has haunted most of us long enough.

Ideal for what purpose? The carrying of one, two, three, four, five, six, seven, or more passengers? Ideal from whose standpoint? The foundryman, the drop forge man, the painter, the factory superintendent, the user, or any other of the hundred and one personalities interested in each and every automobile produced?

There is not, and never can be, an ideal automobile, but what there can and should be, is more progress toward the ideal in the motor car industry. I think that if we are to discuss ideals at all, we must recognize the word "ideal" as an expression of infinity and therefore capable only of indicating direction of progress with no possibility of final attainment. To get down into less rarified atmosphere and a little of the dust of commercialism in our lungs, where we can talk in finite terms of accomplishment, progress toward the ideal in the motor car industry, as I think you will agree, must be progress in the making of the automobile increasingly useful to the human race. If this be true then the greatest advance toward the ideal in any automobile, for whatever class of buyer, and of whatever size, is that automobile which will give to its ultimate user *the greatest amount of satisfaction per dollar of total cost.*

I want you to keep in mind that I am using the words "satisfaction" and "cost" in their broadest possible application. For example, the most durable and lowest cost car, for its size and type, might be unsatisfactory if of bizarre and displeasing appearance. Now this makes it obvious that "satisfaction" used in this sense, is not only a broad generalization but a somewhat elusive one. The question will naturally suggest itself to you—how far can we be specific in the discussion of such a term, which involves as one of its component parts so unstable a thing as the average man's taste?

We have all been told by the omniscient selling organization that the general public, or at least that portion of it which buys automobiles, is as fickle in its ideas of beauty and harmony of proportion, as a woman is in regard to the amount of cloth necessary to make a skirt. Personally, I do not believe that we, as a body who are supposed to

Digitized by Google

deal in pure logic, have been as consistent in our work as has been the automobile buying public in the matter of general appearance in a motor car. The members of this Society can remember with me when in appearance the then standard automobile bore a striking resemblance to a combination of toboggan, bicycle, and parlor settee, when pretty much everything about it was exposed, except the head of the piston and the inner end of the spark plug and even these parts had a way of occasionally making themselves visible, in an effort to lend piquancy to automobiling as a sport. At that time in the history of the automobile industry, even fenders were extras, to be purchased and shed en tour.

Now if you will follow with your mind's eye the history of development in the appearance of the automobile, you will observe that the buying public has been singularly consistent in approving only those changes in appearance which have tended toward simplicity of form and comfort for the user. Can we, as exponents of pure logic (?), claim equal consistency in the development of those mechanical elements of the car which do not affect the appearance, and with regard to which the buying public is less dictatorial? There are four principal elements which determine the satisfaction or lack of satisfaction on the part of the user of any automobile. They are:

1—Design.
2—Material.
3—Workmanship.
4—Instruction of the user and caretaker.

All dissatisfaction must arise from faults in some one or some combination of these elements. I suppose this paper would be more conventional if it confined itself to the discussion of the first of these elements but I do not believe that any of them can be discussed broadly and intelligently, without the introduction of the other three. To illustrate this point I will call your attention to the introduction of electric starting and lighting. I think every one present will agree that the automobile buying public was singularly fortunate in that the introduction of this equipment was undertaken by two organizations that were well equipped to instruct the user and caretaker and that realized fully the importance of such instruction. Had the same equipment, with the same design, and with the same careful workmanship back of it, been introduced, with the lack of attention to such instruction of the user and caretaker, as is altogether too common, I believe there is little doubt that the public would have felt that it could not render a favorable verdict on such equipment, until it had had several years of further development.

I could go on indefinitely and cite examples where progress toward the ideal has been achieved because of the competence and enthusiasm of the producing and sales organizations, and where on the contrary, possible progress toward the ideal has not been achieved because of lack of intelligent co-operation on the part of the producing or selling organization. I will not, however, take more time on this phase of the

Digitized by Google

question, as I believe every one present is perfectly agreed with me that while progress in design is desirable and necessary, its value to the industry is, to a large extent, dependent upon the intelligence and co-operation of the producing and selling organizations. It is my intent to call your attention to what seems to me those features of motor car design wherein there is most room for progress, but always provided that such progress in the design goes to the public backed by properly selected material, proper workmanship and proper instruction of the user and caretaker.

The virtues of a motor car, as discovered by the buyer, I believe, come in about this order:

1—Price.
2—Appearance.
3—Initial performance.
4—Ultimate performance.

I am using the expression "ultimate performance" as meaning the relative permanence of the car in all respects.

Right here I want to remind you that I am talking of progress toward the ideal as being those changes in motor car construction which, in the hands of proper organizations will make the automobile increasingly valuable to civilized humanity and that therefore there is no place in this paper for consideration of even desirable characteristics which are too expensive to be of commercial value, nor do I give any place to those changes with which we are all familiar which simply achieve ordinary results, at the usual cost and have only the questionable virtue of being different.

DISTRIBUTION OF MATERIAL

The most valuable changes are those which can give to the user superior results, at a reduction in cost. And chief among all progressive changes is, in my judgment, a more scientifically correct distribution of the material used in a motor car. Present-day conventional automobile design seems to me to be a really praiseworthy development in appearance and comfort to the user but a development unaccompanied by sufficient study of the way in which materials are used to secure such comfort and appearance. For example, bodies, fenders, running-boards, running-board aprons, running-board supports, are no inconsiderable part of the weight of the modern automobile and yet their function in the conventional structure is solely that of securing desired appearance and comfort to the user. They do not, in any way, add to the stability of the car structure; on the contrary, they lessen it. Here, in my judgment, is an exceedingly fertile field for the engineer. The first natural question with regard to these parts is—how can their weight be reduced, and, second, if we reduce their weight, will we not reduce their stability and produce a car that will in a comparatively short time become noisy, unsightly and unsatisfactory to its user? The third, and most promising viewpoint is—cannot some or all of these parts be made to perform their

Digitized by Google

present functions of securing comfort and appearance and at the same time add to the stability of the car, by being so arranged as to carry the strains to which the structure is subjected in use?

I would place second in importance the consideration of the structure of the rear axle, because, while the amount of weight which can be saved here may not be very great, it is particularly valuable since it is necessarily unsprung, and therefore any weight reduction which does not introduce weakness or other objectionable characteristics, adds to tire mileage and to the riding qualities of the car. The materials used in rear axles must perform two functions:

1—To carry weight.
2—To propel the vehicle.

I suggest for your consideration a moment's thought as to how much of the weight of the conventional rear axle can be taken out of it and still leave the same load-carrying capacity, or in other words, how much of the weight of a conventional rear axle is devoted solely to the propelling function and whether a considerable portion of this material could not be made to assist in the load-carrying capacity of the axle, without detriment to its other duties, with a reduction in the total weight and cost of the structure and an actual increase in its serviceability.

We naturally come now to my third element in motor car construction, which I suppose many of you would place second or possibly first, namely, the motor. I know that I am placing myself with the minority when I do not admit that motor discussion can be summed up from beginning to end in small bore, long stroke, and high speed. As I see it basically, the opportunity for progress in motor design may be summed up as cost reduction per car-mile, without sacrifice of performance; and while an increase of motor speed may be one way of securing progress in this direction, it is not necessarily the only way or even the best way. Given the same weight per horsepower, other things being equal, a slower moving mechanism is bound to be more durable, and I believe that a more scientific distribution of the materials which go into the motor can result in a highly satisfactory weight and cost reduction, securing instead of extremely high speed, greater piston displacement per revolution of the engine, with consequent lower speed and less reduction between the motor and the rear wheels, with added stability in proportion to weight and cost.

I might go on indefinitely in discussion of the various elements of the motor car but this paper is already too long and I am not attempting a detailed treatise on all of the elements wherein I believe there is room for progress toward the ideal. In reviewing the ground, which I have already attempted to cover, I think I can epitomize the whole situation best by expressing a profound conviction that there is room throughout the whole automobile to make a more scientific use and distribution of the materials commercially available, with a resultant decrease in weight and cost and a resultant increase in initial and ulti-

Digitized by Google

mate performance, without any sacrifice and probably with some advance in appearance and comfort.

THE IDEAL CAR

By Charles Ethan Davis

(Member of the Society)

The future car for economy, luxury and business purposes will, in my judgment, be constructed with the following general specifications:

DESIGN

The car will have a harmonious streamline effect, utilizing substantial materials in body, fenders, bonnet, radiator and wheels, combined in such a way as to eliminate molded surfaces, sharp corners, dust-pockets, projecting hinges and handles; the head-, side- and tail-lights and horn being blended into the general outline, the tool-box, tire- and luggage-carriers concealed in dust-proof compartments provided for in the body design. The wheelbase should be 128 to 132 inches for cars accommodating two to five persons.

WEIGHT

The car filled with gasoline, oil and water should not weigh over 2,750 pounds. This can be accomplished without reducing the factor of safety below absolute security by employing a large percentage of pressed steel parts properly designed.

STABILITY

The center of gravity should be low and as near the center of the car as possible, the weight being carried between axles.

MOTOR

A four-cylinder valveless motor, 3¾ x 5½ inches, carefully constructed to give reliable, economic service under all conditions, at speeds varying from 200 to 3,000 r.p.m., and developing at least 60 B.H.P. at 2,500 r.p.m. (No type of motor barred.)

CARBURETER

Optional. Sealed type desirable. To be located on left side of motor, close-connected and properly water-jacketed. If adjustable, dash or steering post regulator to be used.

CHASSIS

To be low, not over 19 inches from floor line to top of frame, with a road clearance of 10½ inches; frame of pressed steel electrically welded, without side bends and designed to house rear, cantilever springs. A dust-guard under entire length to reduce wind resistance and dust raising.

Digitized by Google

WHEELS

Thirty-six by four and one-half-inch wire wheels with quick detachable rims, using either extra wheel or shoe as desired.

BRAKES

Two sets: as service brakes, one set of internal brake-shoe type to act on all wheels to avoid skidding; one set internal brake-shoe type to act on rear wheels, only for emergency. Brake drums to be covered and as nearly dust-proof as possible. All adjustments to be outside and easily accessible.

SPRINGS

Forward springs semi-elliptic and rear springs cantilever, all with wide, thin leaves to insure flexibility and easy riding. (If shock-absorbers are used, they must have a time element to take rebound, but be inactive on down movement.)

FRONT AXLE

Sheet metal design, including steering knuckles and connections; central pivot knuckles, preferably of castor type.

REAR AXLE

Sheet metal design, worm-gear drive, 3½ to 1 ratio, with worm under axle. Torque and drive to be taken through tube with large end-thrust ball; leather or rubber disc universal connection to propeller-shaft, with suitable rod connections to insure proper spring action. The axle to be so constructed that thrusts for worm and gear are permanently fixed and at the same time easily dismountable for inspection. Total unsprung weight of rear axle, 200 pounds.

GASOLINE AND OIL TANKS

To be located in dash cowl, with filling openings outside the car and easily accessible. Gasoline tank for pressure system to be divided, one part high for gravity feed on hills or starting in case pressure fails. Tank to be so vented that evaporation odors will be eliminated.

STEERING GEAR

Standard worm and gear, locking type; cross steer preferred and adjustable to any desired angle.

TRANSMISSION

If mechanical, four or more speeds forward and one reverse; either silent chain or gear. A new gasoline-electric transmission will give at least ten speeds forward, one reverse. It will also have a charging section and serve as a starting and lighting outfit, operating in connection with a standard storage battery.

CONTROL

If mechanical, a single rocking central lever located well forward. A better method would be pneumatic or electric, operated by buttons. If

Digitized by Google

gasoline-electric transmission is used, a control box located on the steering post and designed to carry horn and light buttons is easily available.

COOLING

Thermo-syphon with liberal radiator and piping.

MAGNETO

High-tension.

STARTING AND LIGHTING

The future type will be a flywheel combined generator and motor without revolving wires, requiring no auxiliary driving mechanism and capable of being easily assembled, combined with a magneto connection similarly operated.

LIGHTS

Two side-lights artistically mounted on fenders and movable to light sharp turns of the road. One tail-light on rear fender to light rear number plate. One centrally located head-light, having a deflector to either dim or turn light in either direction to insure safety from glare when in city or meeting cars on the road; and with a provision for lighting front number plate.

HORN

To be mounted well forward either under or attached to fender and operated from steering-wheel.

ELECTRICAL CONNECTIONS

To be vari-colored wires or bars, thoroughly protected, easily mounted, and traced by means of tool-box chart.

SPEED INDICATOR

To be carefully housed and driven from propeller-shaft, with double dial, one for driver and one for those seated in rear.

TOOLS

Under front seat on driver's side.

TIRES AND TUBES

To be carried in dust-proof compartment in body behind rear seat.

BODY

To be designed on streamlines with fender, bonnet and cowl in harmony. Wide doors, deep, low seats, French style of upholstery or air cushions, with plenty of room for long-geared people. Luggage to be carried under passenger's side of front seat, back of front seat and under rear seat in easily accessible, dust-proof compartments. No boxes or racks on outside of car or on running-boards. Concealed hinges and handles to insure a smooth outline.

TOP

To be a one-person-operated disappearing design to close tight for winter.

Digitized by Google

BONNET

To be of the inside concealed hinge variety similar to the Alexis Kellner design.

WIND-SHIELD

Vented, curved glass to conform to the cowls in such a way as to prevent back or overhead drafts.

SPEED

Car to be governed to a maximum speed of 50 miles per hour, and for touring purposes 25 miles per hour, and adjusted to operate on direct gear in city work down to four miles per hour and to pick up to maximum governed speed in 100 to 150 feet. With a four-speed mechanical transmission direct on third, third speed should cover all ordinary hills. With petro-electric transmission change of speed and power can be made without releasing clutch, and all changes are noiseless.

NOISELESSNESS

Noiselessness is best obtained mechanically with valveless motor, silent-chain transmission and worm-gear axle. In gasoline-electric transmission with valveless motor and worm gear axle.

DURABILITY

The above combination, well cared for, should give eight years' satisfactory service so far as the mechanism goes, and easily cover 120,000 to 150,000 miles, tires of course excepted.

ACCESSIBILITY

The same careful study should be given to all details of the design that is applied to all machine designs. All parts should be easily accessible and removable with the simplest possible tools, either on the road or in the garage, and with no possibility of damage to upholstery or finish. All adjustments of brakes, carbureter and magneto to be easily reached.

FUEL ECONOMY

Fuel economy is largely up to the driver. With careful handling I think an average of twenty miles per gallon can be easily maintained.

VIBRATION

If the car is properly built there will be no unpleasant vibration or noise to cause fatigue, even on the longest journeys.

IN GENERAL

The car ought to be marketed at a price not to exceed $1,500 and be good commercially from manufacturing, efficiency, economic, service and sales standpoints.

Digitized by Google

AN IDEAL CAR

By Herbert Chase

(Member of the Society)

The preferences expressed herein are purely personal, and do not necessarily cover a good selling or manufacturing car, nor one suited to the needs of the average purchaser.

Body—Stream-line body, having a graceful and rakish appearance, with top and windshield, and provision for adequate protection in cold or stormy weather; normally seating two persons side by side, but provided with folding rear seat for two extra passengers, and room for tools and luggage.

Weight and Wheelbase—Maximum weight 1,800 pounds. Wheelbase 130 inches.

Motor—Four-cylinder, well-balanced motor, having a bore of about 3⅛ inches and a stroke of about 5¼ inches is preferred. (I can see no good reason for using a six-cylinder motor in a car of this size.) About 16 horsepower A. L. A. M. rating, capable of developing 45 horsepower at 2,500 r.p.m.; non-poppet valve motor, with preference for rotary type. Well made poppet valve motor not barred.

Transmission—A gasoline-electric transmission, giving eight forward speeds, is preferred. If selective-type gear-transmission is used, it should have four forward speeds.

Gear Ratio—A gear ratio of about four to one should be used, and the car should be capable of a maximum speed of not less than fifty miles per hour, and be able to run on high-speed gear as slowly as four miles per hour. To achieve quietness in operation, worm gear drive is preferred. Also double leather universal joints.

Unsprung Weight—The unsprung weight should be reduced to the lowest possible minimum, in order to reduce tire wear and trouble to a minimum. Probably the unsprung weight should not exceed 10 per cent. of the sprung weight.

Control—Center control, with left-hand drive is preferred.

Type of Springs—The springs should, of course, be designed to make the car as easy-riding as possible. To this end they should be long and flexible. Probably semi-elliptic front and cantilever rear springs are to be preferred.

Accessibility—All parts requiring attention from the driver should be made as accessible as possible; in particular, the carbureter, all portions of the ignition apparatus, and such parts as require hand-lubrication. These latter should be reduced to a minimum.

Wheels—Thirty-two inch wire or pressed steel, easy detachable.

Quiet Operation and Durability—All portions of the car should be designed to run as quietly as possible (attained by non-poppet valve motor, electric transmission and worm drive) and so proportioned as to give a maximum durability consistent with reasonably light weight.

Digitized by Google

ACCESSORIES

Carbureter—The carbureter should have but one adjustment, controlled from the driver's seat.

Magneto—High-tension type, independent of lighting system.

Lighting Generator and Starter—Combined with electric transmission.

A car of this description would be able to average 30 miles per gallon of gasoline consumed in straight-away running and have a low upkeep and operating cost when properly handled.

TENDENCY IN EUROPEAN CAR CONSTRUCTION

By Robert W. A. Brewer

(Member of the Society.)

The following brief notes will convey an idea of the modern European tendency with regard to the demand of the public and will give what is possibly an advanced forecast of the most saleable type:

BODY

Cleanness of design is only obtained satisfactorily by the elimination of flat surfaces presented either to the direction of motion or at the rear of the body. Streamline contour is carried out in a more complete manner than it is understood in the States, for greater attention is paid to the rear part of the body as well as to the shape of the fenders. Seating capacity for four persons in a body width of about 44", the backs of the seats reasonably high, i. e., the seat cushions resting on the floor-boards. The cowl so shaped as to merge with the wind-screen set at an angle of about 45°. This deflects the air current above the heads of the occupants without impressing too great a wind resistance. The total head resistance, plus rolling resistance of such a body on a good smooth road at about 60 miles per hour, would be about 25 h.p., and the motor should therefore develop about 36 h.p. on brake test at say 2000 r.p.m.

MOTOR

Four-cylinder high-efficiency motors are far more popular than any other type. The six-cylinder has only a comparatively small field of adherents, and these of the wealthier class. Anything between 80 m.m. and 90 m.m. bore, or even 95 m.m., will cover the requirements. The ultra long stroke is disappearing. A good size would be 85 x 140 and should easily develop the necessary power.

GEARS

Four forward speeds are necessary, direct on top. The gear ratio in the rear axle 3½ or 4 to 1. This enables a very large range on top speed

Digitized by Google

drive. The high rotational engine speed will provide the high car speed so long as the torque curve does not reach its peak.

CONTROL

Right-hand driving is universal with the gear levers in an enclosed gate. Throttle control by foot pedal with over-riding hand-operated mechanism by small lever on the steering-column.

SPRINGS

Semi-elliptic all round, with a tendency to the cantilever.

ACCESSIBILITY

A modern motor being so reliable, accessibility is scarcely required, except to the carbureter and magneto. The former is preferably fed from a fuel tank contained in the cowl, gravity supply to the carbureter itself which is placed as high up as possible and often directly bolted to the engine casting. Personally I prefer a special form of combined inlet and exhaust manifold, which gives a streamline flow, as with this manifold considerable fuel economy can be effected.

EFFICIENCY

It should be quite possible to get a brake mean effective pressure of 80 to 100 pounds per square inch from a modern engine. The compression ratio can be about 4.7 to 1, but this depends on the contour of the combustion head. Such a motor should have no vibration, and when properly designed and made, runs equally smoothly at all speeds up to 2500 r.p.m. Pressure-fed lubrication to all the crankshaft bearings is essential. If the clearances are suitably made, there should be no signs of metallic contact on the big-end bearings. This can be carried out quite easily in practice. Lightness of reciprocating parts is essential.

HIGHEST QUALITY SIX-CYLINDER CHASSIS FOR AMERICA

By A. Ludlow Clayden

(Member of the Society.)

At the present time the position of the six-cylinder car in Europe forms a very interesting study. It is doubtful whether anyone can forecast its future. At the present time methods of manufacture and principles of design have undergone so much alteration that numerous high-powered four-cylinder cars, which are quite as smooth and pleasant to handle as the best six-cylinders, are coming on the market. Further, there are a number of difficulties peculiar to the six-cylinder

Digitized by Google

construction. The vexed question of six-cylinder carburetion has never been settled. The difficulty of eliminating periodic vibrations with the necessarily long crankshaft still remains pronounced. Also, probably owing to piston friction principally, the six-cylinder engine is invariably less efficient than a four-cylinder of equally good construction—efficient, that is to say, in the power to volume ratio. This means that for a given power a six-cylinder car must necessarily be considerably heavier than a four cylinder. Add to this increased cost for a given power, decrease of available body space for a given wheelbase, or greater length and therefore cumbersomeness necessary to carry a bigger body, and most of the disadvantages of the six-cylinder car have been summed up. On the other hand, there are a few six-cylinder cars which possess greater smoothness than has yet been attained with any four-cylinder, owing to the undeniably better torque, but none of these cars is efficient. They are cars which, while suited excellently to bear elaborate carriage work and provide luxurious travel at moderately high rates of speed, are seldom found in the possession of men who drive themselves or take a great interest in the mechanism. From an advertising point of view the six-cylinder car appears to have been made the only possible thing for America. In Europe the six-cylinder argument is practically dead.

It is, however, possible that the present position of the six-cylinder car in Europe is misleading because no effort has been given to the production of a really efficient six-cylinder, except by the Sunbeam company; the 30-hp. Sunbeam holds records which leave no doubt whatever concerning its efficiency. The method followed by such concerns as the Sunbeam company is, first, to produce highly efficient cars and then obtain quietness, etc., without depreciating the efficiency. In this the Sunbeam and Vauxhall companies in particular have been remarkably successful. The Sunbeam is, of course, a small six-cylinder, but there seems to be no reason why the same methods should not be applied to a larger engine.

SUMMARY OF COMMENTS

In making a new car for England or the Continent it would undoubtedly be far better to specialize on a highly efficient four-cylinder type and leave the six-cylinder entirely alone. On the other hand, it seems that for a new American car the so far untried scheme is the production of a highly efficient six-cylinder. The specification hereunder is a suggestion for the main characteristics of such a chassis.

SPECIFICATION FOR MOTOR

The dimensions should be certainly not more than 4″ bore by 6″ stroke and there would be several advantages in adopting 3½″ bore by 5½″ stroke; this latter size would be capable of giving as much power as the largest American six-cylinder engines if the engine were made in accordance with European principles. The advantages of the smaller dimensions would be less weight, lower cost, greater ease in eliminating vibration and less overall length.

The cylinders should be cast in threes with the valves all on the right-

Digitized by Google

hand side. The three-cylinder blocks are quite handleable by one man; can be rigged in position quickly and easily; are not so likely to be bad castings owing to having less complication than a block of six; need not actually require more machining if care be taken in the design; and, finally, are much easier to remove and replace. When four-cylinder blocks were first introduced there was much complaint in certain quarters that private owners would find them very awkward to take off, and undoubtedly there was something in the objection. A six-cylinder block needs very elaborate tackle and several men to remove it from and replace it on the crankcase for cleaning with the pistons in position. Of course, this is not an objection that the ordinary buyer thinks very much of until he has to take the engine down, but when he does he never forgets it. Also, in my opinion, a six-cylinder block looks very heavy and rather clumsy. However, this last is not a point of great importance.

The water-jacketing should be sufficiently generous to enable thermo-syphon cooling to be satisfactory with an atmospheric temperature of 80° F. in ordinary country. In the cylinder blocks the passages to the intake should be cored and carried through the water-jacket to the opposite side to the valves, bringing the carbureter on the left-hand side. Between the carbureter and the cylinder castings the shortest possible pipe should be used and this also should be jacketed in a manner ensuring ample circulation of hot water. Although the word "pipe" has been used it is better to employ a box big enough to contain one or more cylinder charges, or else to use a circular loop pipe, as has been illustrated frequently on various racing engines, and as is used by the Austin company notably. It will probably be necessary to experiment with different inlet-pipe arrangements, as different engines do not appear to be suited by precisely the same design.

Returning to the cylinder castings, these would each have a water inlet at the bottom on the same side as the carbureter. There would be the usual cast dome for a head, and in addition the Napier practice should be followed of taking two pipes from the jacket immediately adjacent to the valve-pockets, joining these and leading them up to the radiator separately from the main outlet. This has been found to make a very great difference in engines used in mountainous districts, as it prevents entirely the otherwise always-present danger of formation of small pockets of steam in corners of the valve-jackets, it being almost impossible to cast cylinders without risk of a few traps of this nature.

The crankshaft should have seven bearings because, although it is possible to make a fairly satisfactory engine with a smaller number, the best possible running cannot be obtained unless the supports for the shaft possess the maximum of rigidity and this can only be the case with seven bearings. The diameter should be not less than 2½ inches, this applying to both the main journals and the crankpins, while the webs should be proportionally stiff. Weight should not be spared in the crankcase, as the success, or non-success, of the six-cylinder engine depends almost entirely on the absolute rigidity of this portion. Very stiff

Digitized by Google

webbing to support all the bearings is therefore recommended, and the case itself should be distinctly on the thick side. Distribution gearing should be by inverted-tooth chain. A chain 3 inches wide is recommended; 2½ inches might be regarded as the minimum. There are various methods of adjustment, and adjustment is deemed to be essential, not for the use of the owner of the car, but for convenience in manufacture. There would be, of course, a crankshaft pinion, the camshaft wheel, and at least one other. Whether this should drive the water pump and magneto direct or whether the third pinion should be made in one piece with a skew gear driving a cross-shaft for these two accessories, would depend upon the general layout decided upon. If it is possible to dispense with the cross-shaft a certain amount of manufacturing cost is, of course, avoided. On the other hand, usually with large engines the magneto and the pump are brought into the most satisfactory and most accessible position by the use of a cross-shaft, more especially when it is necessary to keep the magneto high. The pump might also be inserted directly in the cylinder casting by leaving the front end of the cylinder open and bolting on a bronze or aluminium casting carrying the pump and fan. This would add a facing operation, but I believe it would save in the long run, as the machining of the pump chamber and the bearings for the fan can be carried out far more expeditiously on a small piece than on the whole cylinder block.

The exhaust branch should be a separate casting provided with one expansion joint between the two cylinder-blocks, and it should be kept high, so as to interfere in no way with the accessibility of the valves. Many European makers have made experimental designs in which the exhaust manifold was part of the casting. They have, however, always returned to the separate branch, which I think may be taken as sufficient evidence that the cast-in branch is not satisfactory. Supposing it is water-cooled, it is necessary to make it very big externally and also to increase considerably the amount of water carried. If, on the other hand, it is not water-cooled, it becomes much hotter than any other part of the casting; being hotter it is bound to expand and by expanding it cannot help distorting the cylinders. Even though this distortion be slight it is sufficient to increase piston friction and eventually bring about uneven cylinder-wear. Further, in order to make the engine thoroughly efficient (and in my view an engine which is not thoroughly efficient is not worth introducing as a newcomer on an already well-stocked market), it is essential that the inside of both the exhaust and inlet pipes be as smooth as possible, as the resistance offered by roughness of surface is a great deal more than would ordinarily be expected. Owing to the rather complicated nature of the core it is impossible to get anything like a smooth interior with a one-piece cylinder and exhaust branch. Of course, foundry practice has improved enormously, but I am inclined to believe that there is a tendency to put too much on the foundry. Thus, in a six-cylinder block, owing to the large amount of metal to be poured, and the considerable contraction, it is possible for quite grave inaccuracies in wall thickness to occur which cannot be

Digitized by Google

checked except by cutting up a casting and, of course, bad castings are sure to be those which one does not cut up.

The valves will, of course, be enclosed under the usual cover-plates, but the tappets should be mounted in the cylinder foot. The tappets ought, in fact, to be situated in a shallow trough formed in the casting; that is to say, with the cover-plate removed there should be still left a sufficiently deep chamber around the tappets to contain oil which is bound to be exuded from the tappets. Tappets can be made without rollers, but to the detriment of cam durability, and to a certain extent to the detriment of silence. I do not quite see why this should be so, but undoubtedly it is true that the roller helps to keep down noise. It is advantageous to work the tappets in the nearest possible approach to an oil bath, and the arrangement suggested, although not easy to describe in words, is very simple on paper. The ends of the cover-plates should be curved, instead of using a flat plate butting against the end-pieces made with the cylinder casting, because these solid end-pieces render the valves at each end of a cylinder block extremely inaccessible. The curving adds a little to the cost but is certainly worthy.

The camshaft should be of a diameter corresponding proportionally to that of the crankshaft, and cams of the largest possible diameter which can be accommodated should be employed, partly for the sake of durability, but more for the sake of getting the desired valve diagram as nearly as possible. Valves should be not less than 2⅛ inches diameter.

For lubricating arrangements the crankshaft should be drilled and oil supplied to each main bearing at about 30 pounds per square inch pressure. The oil would pass through the shaft to the big ends and no special means need be taken for lubricating the piston-pins or the cylinders. To prevent the access of too much oil to the cylinders the crankcase should be made with a false top. Immediately beneath each cylinder the only connection with the crankcase should consist of the narrowest slot through which it is possible to insert the connecting-rod, but the baffle-plates should not close the bottom of each cylinder individually. A method which has been employed very successfully is to extend the crankcase upwards above the baffles, which are cast in one piece with it, so that the cylinders stand open to a shallow chamber—say one inch deep—running the whole length of the crankcase and separated from the crankshaft by the thin web with the necessary six connecting-rod slots. This longitudinal chamber allows the air displaced by the descending pistons to travel along and ascend under the other three without passage through the oil-laden atmosphere of the crankcase proper. It has been found that ample lubrication is obtained when using high-pressure oil-feed, and with this scheme smoking troubles are overcome. In order to complete discussion of the system of lubrication it is necessary to anticipate a little, as one detail of the lay-out to be recommended affects this point profoundly.

FLYWHEEL IN FRONT OF ENGINE

The suggested design includes a recommendation that the flywheel be placed at the front end of the motor instead of at the rear, as usual.

Digitized by Google

The three lowest points in a chassis are the front axle, rear axle and flywheel, and it is easy to see that if there is a hump in the road of wave formation it will be easy for the hump to clear both the front and rear axles and yet strike the flywheel, owing to both axles being lower than normal just at the instant that the flywheel is over the hump. With the flywheel at the front end it would be protected by the front axle and carried over anything over which the front axle would pass. Another conspicuous advantage, though not so important as the one just mentioned, is that consequent upon the fact that with a unit system for the engine and gear-box the necessary enlargement of the casing around the flywheel is a source of considerable weakness, or, looked at from the other point of view, the necessary enlargement calls for a very great increase of weight in order to get sufficient strength. A smaller casting without the flywheel pit is cheaper in first cost and easier to machine. The arrangement also has several advantages when the fitting of an electric motor-starter has to be considered, but these need not be gone into in detail at the moment.

Returning, therefore, to the lubrication system, the deep end of the crankcase sump obviously ought to be at the forward end as close as possible to the flywheel; otherwise the principal advantage of placing the latter at the front end is nullified. There is, however, a difficulty in that the oil supply to the pump needs to be most certain while ascending a grade. It is possible that this difficulty is not so serious as it appears, but to decide it definitely without knowing the actual clearances and without setting out the design on paper with some degree of accuracy, is almost impossible. Assuming that there is difficulty, the best way of avoiding it would probably be to adopt the system employed on the six-cylinder Wolseley cars. Here there is practically no sump, the crankcase being quite shallow, sloping downwards slightly from each end to the center. Oil is withdrawn from the crankcase by a gear-pump and supplied to a box which takes the place of the sump and is in one piece with the crankcase and high up on the side. This suction pump is of large dimensions but of quite ordinary design and appears to be in every way satisfactory. From this box on the side of the crankcase—which is large enough to contain all the oil in circulation—the forced feeds to the bearings are supplied by a separate and smaller pump. Failure of the suction pump would result in the flooding of the crankcase which would be announced by smoke, and failure of the supply pump would, of course, be shown by the indicator on the dashboard. The extra pump, however, introduces no extra risk and merely adds a little to the cost. The operation of emptying the system, washing out the oil box and so on, is facilitated a little by the higher placing, and the filters likewise become more accessible. For the suction pump a gear pattern is probably the best, but it has a disadvantage for forced feeding in that the output is not easy to control, appearing to bear no very direct relation to the speed. For the Vauxhall cars, including the racing machines, piston pumps have always been used for the oil, and it is doubtful whether this type of pump can possibly be improved upon

Digitized by Google

for any purpose. It is not expensive to make and is easy to set to give the desired feed.

Having discussed the lubrication system it is perhaps worth while to add a word concerning the bearings, which should be of babbitt metal and might be die-cast. One point, however, is essential and that is that the crankshaft should be fitted to these bearings by thoroughly efficient hand-scraping. For six-cylinder work the reamering system *could* be made to serve, but it is not possible to obtain really first-class results from it.

As to the pistons, these would preferably be of cast iron with the pins oscillating in the small ends of the connecting-rods, for which latter there is nothing practically better than a good drop forging. Phosphor-bronze bushes on the hardest possible steel piston-pins give the most satisfactory results. For the other bearings the exact nature of the white metal employed would of necessity depend upon the nature of the steel used for the crankshaft. For a six-cylinder crank it is probably worth while to machine all the webs, especially in a seven-bearing crank whereof the clearances must of necessity be somewhat small. It is not, however, necessary that the finish on the webs be of a very high order, because it is regarded as essential that the crank shall be balanced on a running balance machine, and this naturally applies to the flywheel as well.

CLUTCH AND GEAR-BOX

Having the flywheel at the front end of the motor makes possible a single casting or a single pair of castings (the top half and bottom half) for the crankcase and gear-box. It would, however, probably be more convenient to make a separate piece of the gear-box and the clutch-box. This could be decided definitely only after laying out the design on paper. A lengthy experience of clutches of every kind has led to the conclusion that the dry-plate clutch, in which one surface is steel and the other woven wire and asbestos compound, is the most satisfactory for cars of high power. The number of plates depends upon the diameter and the engine power, and can be decided only by experience. For mounting the clutch there would be an extension of the crankshaft and the shaft carrying the striking gear would preferably be placed beneath the center rather than above it. Such positioning enables long pedals to be used, giving big leverage, while it also clears the clutch completely from above and makes adjustments readily accessible.

It is assumed that the gear-box and crankcase would be bored after being bolted together, and therefore the main gearshaft ought to be perfectly in line with the clutchshaft. It is, however, recommended that a simple universal coupling, preferably of the spring-steel-ring or Schneider type, be employed as this is very easy to disconnect without taking down either part of the unit, and also reduces the accuracy in boring necessary by a small fraction of an inch. Naturally the clutch would be enclosed completely; the lid or cover giving access to it may be either an aluminum casting or a steel pressing.

Turning now to the gear-box, four speeds with a reverse should, of

Digitized by Google

course, be provided. Wheels with big teeth are preferred. Considerable width of tooth is also an advantage from the point of view of silence. The spigot should run on ball bearings, but the main shaft and layshaft may be mounted on either ball or taper roller bearings. The advantage of using the latter is that it eliminates the otherwise absolutely essential thrust race on the main shaft. Concerning the arrangement of the gears, and the striking mechanism inside the box, no departures from the normal practice are considered, but the control should undoubtedly be in the center of the chassis, the gate thus coming immediately on top of the gear-box. Probably the best arrangement for the gear-shifting lever is to mount it on a ball which is automatically dirt-proof and self-lubricated. There are, however, disadvantages in not having a visible gate, but there is a design entirely adaptable for such a layout as the one under consideration.

FINAL DRIVE

It is not proposed to discuss axle arrangements at the present time, but it is believed that the best arrangement, considering the advantages and disadvantages of all systems, is to have a single universal joint behind the gear-box, contained inside a large ball, the latter forming the end of a substantial tube containing the propeller-shaft. This tube acts as the driving member, as a radius- and as a torque-rod. The arrangement can perhaps be improved by the addition of side rods, but they are in themselves troublesome in certain respects and it is doubtful whether the sum total of gain in having them amounts to anything at all. The possibility of side-sway from lack of rigidity can be overcome by the use of wide springs with well-proportioned eyes and carefully fitted shackle bolts. One essential of the arrangement suggested is that the ball be of thoroughly adequate diameter; somewhere in the neighborhood of 5 inches is suggested as about right for a car of the size under consideration. The universal joint contained therein would preferably be of the ring type with ball bearings, or again, taper roller bearings, as these types appear to be everlasting. The torque-tube would, of course, be steel; the ball should be phosphor-bronze.

It now remains to consider the way in which the thrust from the ball should be applied to the car as a whole. It is suggested that the end of the gear-box be cast steel and that the ball housing be machined in this. Near the forward end of the power unit on the sides of the crankcase would be a pair of substantial pads, placed vertically, to which a pair of drop forged arms could be attached. It would be possible to use the ordinary cast aluminium arms, but it is deemed preferable to take the drive through steel. The ends of these drop-forged arms would be turned spherical, giving balls about 2 inches in diameter, and a similar ball would be bolted firmly on the gear-box by a pair of long bolts passing right across the steel casting on either side of the large ball at the rear end. The necessary sockets would be placed on the side members to the frame for the front ends, and on a cross member for the back end. This arrangement would avoid the necessity of any

Digitized by Google

dropped or bent cross members, thereby avoiding weakness and expense; would relieve the unit from all twisting stresses and provide ample area for driving. It might be an advantage to mount the socket for the ball at the rear end, itself on a swivel, so that the whole of the driving force would be applied through the two arms; this would dispense with the possibility of undue load being placed on any one ball through disalignment of the frame. Conversely, it might be preferable to take all the drive through the single suspension on the cross member at the rear and allow the front sockets a little swing. Probably convenience in manufacture and erection would be the deciding factor. One detail which has not been mentioned is that the universal joint should be allowed a little telescopic movement on splines, on either the propeller-shaft or the gear shaft. This would compensate for any inaccuracies in erection and also make it possible to withdraw the whole transmission by removing the back half of the cast steel sphere-casing. It might be pointed out that this latter provides a unit which can be fitted in the frame very easily, and which is entirely independent of any necessity for lining up to the rear axle. The system described is likewise a complete unit and the only great accuracy required in the spring mounting on the frame is to see that the two axles are parallel.

The steering-gear would be bolted to the crankcase on the left-hand side of the engine, as left-hand drive is undeniably the only possibility for American usage. This would leave the right-hand side of the engine very clear for obtaining access to the motor starter and the oil tank, if the Wolseley arrangement were adopted. It is suggested that if a cross-shaft is used the magneto should be so placed that its contact portion is accessible from the left-hand side. It is an advantage to have such parts as carbureter, magneto and lubrication details so placed that they can be all inspected at the same time with the minimum amount of moving about.

Engine control should consist of hand-throttle and spark lever on the steering-wheel, and also a well-balanced foot-throttle, so operating that the hand-lever controls the cut-off. The throttle-pedal should be situated immediately behind the base of the steering-column and between the brake- and clutch-pedals. An arrangement of steering-gear which allows for a slight adjustment for rake is also recommended, not to enable different angles to be obtained for different styles of body-work, but to allow the driver a little latitude as to the closeness of the wheel. This is a point which has been neglected very much indeed, but there is no doubt that a large man is far better suited by a wheel rather higher up and rather further forward than a small man. All that is needed is an arc of travel giving about 3 inches of movement measured at the top end of the steering-column.

For the motor-starter it will be possible to fit an electric dynamotor either at the forward end of the crankcase on the right-hand side to mesh with the flywheel, or—and this would probably be much neater—on the right-hand side below the valve level and at the back end, taking the normal drive in the most convenient way, preferably by chain from

Digitized by Google

the camshaft and using a small sliding gear or a little epicyclic train to provide a gear-down for starting. Yet another place where the dynamo can be fitted is on the side of the clutch-case, the outside of the clutch being toothed.

CARBURETER

The carbureter is outside the scope of the present discussion. Just as with inlet-pipe arrangements, the best carbureter for any engine is usually found by a process of trial and error. Theoretically the best is the Polyrhoe or the Claudel, but the former is very difficult to manufacture and both are expensive, while in many cases other carbureters theoretically less pleasant seem to give better results.

WATER PUMP

The only other detail of which no particular mention has been made is the water pump, the only requisite for which is that it should be sufficiently powerful to cope with any climatic conditions likely to be encountered. It should be of a centrifugal pattern which allows fairly free syphonic circulation if the drive fails; it should have an easily adjustable gland, and a weak coupling between it and its driving-shaft, which will fracture readily should an attempt be made to start the engine with the pump frozen.

FUEL FEED

The method of fuel feeding probably most satisfactory is to force fuel by air pressure from a large tank through a small tank on the dashboard to the carbureter. This small tank will trap sufficient fluid to enable a start to be obtained and to give a few minutes' running without the necessity of pumping up the pressure-system by hand. To supply the pressure there should be a plunger air-pump, the clearances being calculated so that is is never possible to deliver air at more than about five or six pounds per square inch. This pump might be driven direct from the camshaft or incorporated with one of the oil pumps. I can quite understand that in America there is a liability for pressure joints to work loose, but even if a gravity dash-tank were used, I would prefer to maintain the feed by pressure, and in such case the pipes would be so short that I think vibration troubles need not be feared. One cannot obtain efficiency with a long inlet-pipe and it is impossible to avoid the use of a long inlet-pipe with a gravity-feed because the tank cannot be mounted at a sufficient altitude, even on the dash, if it is to hold enough gasoline for 200 miles. It would, however, be possible to devise a dashboard tank with two compartments and to use the pressure merely to lift fuel from the bottom compartment to the upper one.

BRAKES

The contracting-band type of brake ought not to be considered. It has only one advantage, which is that it is easy to make very cheaply. A band-brake is never powerful, never quick in action, never easy to

Digitized by Google

adjust, invariably gives rise to rattle (as it contains of necessity a large number of joints which get lubricated principally with mud) and moreover is extremely unsightly. Granting that extremely good working surfaces for brakes are steel and woven material such as has been recommended for the clutch, the best arrangement from all points of view seems to consist of wide cast steel drums, ribbed for cooling, fitted to each rear wheel, and two sets of shoes side by side each faced with lining material, one pair operated by the hand-lever and the other pair by the right-hand pedal. Such brakes can be enclosed completely so as to be protected from dirt. There are not many bearings or joints and all these are easy to supply with adequate lubricators.

The best operating system is to run the two pull-rods slightly above the torque tube, actuating the expanding cams of the outer pair of brakes by means of shafts, taking one bearing in the brake bracket at each end and the other bearing in the differential case; the other pair of brakes being controlled from tubes rotating on the outside of the said shafts. These are best situated above the axle and are neater and less troublesome to erect than cross-shafts on the frame itself. The ends of the operating arms would, of course, be connected by an ordinary compensating link. For adjustment and setting, hand-tensioning wing-nuts would be applied to the pull-rods and there should be some arrangement whereby the operating arms can be set relatively to the spreading cams, so that as wear takes place the levers can still be kept in a normally vertical position. It would be easily possible to arrange for the lubrication of the bearings of the brake-opening shafts at the inner ends, from the inside of the differential box. The bearings at the outer ends can be supplied with grease from the same cup that feeds the bearing between the spring table and the axle sleeve. Thus the whole of the connections should be lubricated by means of a single pair of grease-cups on the axle.

STEERING-GEAR AND CONTROL PARTS

There is no doubt that ultimately all front axles will be designed with the steering swivel-pin inside the hub and in the plane of the wheel, because this arrangement removes all possibility of shock in the steering-wheel, gives absolute security on the roughest roads and enhances the durability of the steering-gear enormously. The only disadvantage is the necessarily large hub which has been considered rather ugly. If such a matter is deemed important, care should be taken that ample ball thrust-bearings are provided in the swivel-pins and in the steering-gear itself. There is only one pattern of ball-joint for steering connections which is absolutely secure and this should, of course, be ample. For the control through the steering-column the simplest possible arrangement should be employed, as a great many controls which are used at the present time contain a very large number of totally unnecessary moving parts.

Digitized by Google

Contributed by F. C. Mock

Based solely upon the carbureter engineer's point of view, my own ideal of a car is one that has nothing about it remotely resembling a carbureter. But as nowadays we have to have carbureters, the second best choice in this respect is a car in whose performance you can find no irregularities indicating the presence of a carbureter. This condition can nearly be obtained by making the intake manifold compact in shape and by heating its walls, particularly at the bends, above a temperature of 240° F.

This will (a) Give smooth running on a very light mixture proportion. (b) Eliminate "loading." (c) Give acceleration from the lowest driving speeds without hitch or back-fire, on a very thin mixture. (d) Remove to a great extent the troubles due to changes in weather conditions.

The fuel mileage of the ideal car may be greatly increased by having the fourth gear of so high a ratio that the throttle will be well open under ordinary driving conditions. This is to avoid the extremely low thermal efficiency shown by an Otto cycle motor under the low compression of a highly throttled charge.

As to the carbureter of this ideal car, it should preferably be made so that at closed throttle the mixture proportion is that of maximum economy, but at wide-open throttle that of maximum power. It should also have an automatic control, making the mixture proportion independent of temperature and weather changes.

DISCUSSION.

CHAIRMAN ZIMMERSCHIED:—We have had presented to us the ideal and some ideas in motor car construction; that is, some personal preferences as to details and perhaps as to principles, which are now open to you for discussion.

C. E. DAVIS:—There are several definitions of an ideal; that which is unattainable, that which is perfect, or that which is greatly to be desired.

In approaching this subject I presented suggestions of what appealed to me as the most desirable features of the future car. It seems to me that it is desirable for the American manufacturer to study more carefully than in the past few years the coach-work of our foreign competitors. The tendency of the present designs is to use too light material, giving a tinny effect, if I may use that term, rather than a substantial appearance. One of the best coach-work designers I ever met made this remark to me in Berlin last year, in regard to American cars. "The trouble with American cars is that when you put them in a line for comparison, they all appear to be alike. You have no distinctive individuality in design, particularly in coach-work."

I am perfectly well aware that designs have been worked out in which it is possible to make a car of the size under discussion very much below 2,750 pounds weight and still maintain the factor of safety required for continuous service. However, this weight of car, with gasoline, oil and water, is much below the average at the present time.

Digitized by Google

My belief is that we shall come to the adoption of brakes on the four wheels of the car. I rode in the Argyll car last year on extremely oily, wet roads, and on steep inclines. The car was controlled with ease without skidding. You undoubtedly know that these brakes are connected diagonally, one front and one rear, with equalizers, so that they are applied on all four wheels. Going down an incline of possibly fifteen degrees at thirty-five miles an hour, without releasing the clutch the brakes were applied suddenly, and we did not swerve one way or the other, but simply rolled quietly to a stop without any difficulty or tendency to skid.

Accessibility should be considered more carefully than it has been in the past. The car should be designed in such a way that the man handling it in the garage or shop can do the least damage, and the fewest possible tools be required on the road. Here is a field for the engineering force to study. That point I accentuate regardless of the present exceptionally fine results.

J. R. CAUTLEY:—I must take issue with Mr. Clayden on the width of the chain. Two inches is ample; two and a half inches is more than that; three inches is wider than I like to see.

Mr. Clayden has mentioned the adjustable steering pillar and wheel. I find that about one out of ten cars is fitted with a driving-seat comfortable for me, and it seems to me that if I wanted to lend Mr. Chase my car with fixed seat suitable for me he would have to lay his head against the back of the seat. Some adjustment is necessary. I prefer adjustable seats to adjustable steering-wheels.

In one of the papers mention is made of the worm-gear rear axle with the worm underneath. If there is anything in having the clearance at the center of the rear axle as large as possible, the overhead worm is proper. Several companies in the truck line have followed the Dennis people in the use of the overhead worm.

DAVID FERGUSSON:—We must remember an old engineering saying that "there is no finality in engineering." We have to change our ideas as years go by.

Quoting from a recent editorial,* "We labor under no delusions in this matter as we fully recognize that, so far as present knowedge goes and when first cost and running cost can be ignored, the best combination for slow or fast work, as conditions require or inclinations dictate, is the large six-cylinder engine in a low-geared car. This combination gives the two essentials to comfort, so far as the prime mover is concerned:

> "(1) A nearly perfectly balanced engine, sufficiently large to propel the car at speeds as high as required on the road without making its working unduly apparent to the occupants of the car at any time.
>
> "(2) Very slow and smooth running as well as fast running are secured, with good acceleration, as a result of the excellent balance and good torque making a low gear possible (i.e., a gear which is

*Autocar, May 30, 1913.

Digitized by Google

relatively low for the size of the engine, although not low enough to necessitate high engine speed.)

"This delightful though expensive combination may be summed up in another way by saying that the royal road to comfort combined with speed when required is a large engine, which although low-geared for its size, never need be run really fast, and, consequently, never becomes obnoxious to the people in the car."

The writer goes on to infer that all other types are a compromise either in regard to price, weight or cost of operation. This article is particularly significant at this time, being written by an authority in a country where for the last two years the small high-speed engine has been developed to the greatest possible perfection.

A. P. BRUSH:—It seems to me that unless we treat the ideal as an expression of unattainable infinity, we are not treating with the ideal at all. We can safely agree that commercially there is no such thing as the ultimate in engineering or progress.

A maximum price which has been suggested is $1,500. With the progress possible in manufacture, with simplicity—and by simplicity I mean not only mechanical simplicity, but the fundamental simplicity of standardization—and with the possible progress in price reduction, I would like to have you all think for a moment as to what percentage of cars five years from now will be sold at prices of $1,500 or above. If we are going to limit the discussion of ideal cars to cars which cannot —and I think I speak conservatively—be more than twenty per cent. of the total produced, it seems to me we are off our subject. I think that the ideal in car construction must show progress in the making of the automobile increasingly useful to humanity; and that must be the rendering of cars more valuable, more desirable to the maximum number of buyers.

C. E. DAVIS:—I recognize very clearly the point which Mr. Brush has made and know that specifying the price mentioned apparently eliminates many of the cars now in existence. On the other hand, if we set out to embody in a car anything like ultimate perfection we shall not have all that we desire in a car at the lower price. While the tendency of the present time is toward the extremely low cost car, I feel that the pendulum will swing back and that a large number of people who are using cars for general purposes will favor a higher medium-priced rather than a low-priced car.

A. B. BROWNE:—It appears that we are wasting a lot of time discussing the English language rather than the car. It seems to me that all our efforts should be directed toward improving the present motor car in scope of usefulness. If that is a fact, we had better consider the faults that exist in the present motor car. If we are to study these faults what should we consider more carefully than the carbureter? It is not my purpose at this time to enter into a discussion of carburetion, but it is a trifle amusing to hear the gentlemen discussing the faults of motor cars and hoping to improve them, while dismissing the subject of

Digitized by Google

carburetion. Unfortunately we must have carbureters, and they should receive the deepest consideration. Many of the details that have been brought up, particularly in the papers on English practice, webs on the crankcase and similar details, sink into utter insignificance compared with the proper functioning of the carbureter.

JOHN WILKINSON:—I wish to call attention to one point that I think we will all agree on in ideal car description. In the question of scientific distribution of material we have one great example. It does not happen to be metal in this case, but other material. When the old deacon's one-horse shay—you have all read the poem—had run a hundred years, it all broke down at once. We must design good cars and place the materials so that all parts are of equal strength. If you make the parts all of equal strength, you can make your automobile about twice as light and twice as strong. You can increase the strength by a very large percentage by taking out a lot of metal. This was done in the case of the bicycle by swedging the spokes; a swedged spoke was stronger than the same sized spoke with the weak part on the threaded end. A very common example is the rear-axle shaft. A round shaft is taken and both ends squared off, thus making them the weak part. While you are throwing away a lot of metal you are throwing a way a lot of money. If you would just make that axle square the whole length or upset the ends, you would have just about double the strength in the axle and the car would be lighter.

CHAIRMAN ZIMMERSCHIED:—Sometimes the shortest remarks are the meatiest. I take issue with Mr. Wilkinson on one point: that all parts of a car should fail at one time. For instance, in the steering mechanism is it not advisable to make the steering knuckles, spindles and reach-rods not only strong, but of equal strength, and then make the pitman arm a little the weakest of the whole assembly; so that if, under unusual circumstances, one runs into an obstruction, everything will stay in proper relation, except that the pitman arm will be bent back a little? Then the whole steering gear can be straightened out by straightening this one member, the most accessible one of all. In a few cases I think it is good engineering practice to provide a weak link which is easy to repair.

JOHN WILKINSON:—You are mistaken in one thing. Assuming you have a weak link, then if you will take the rest of your construction and work it down to the strength of the weak link, your construction will never break.

CHAIRMAN ZIMMERSCHIED:—My point is this: in an extraordinary case, such as a collision, it is much easier to straighten one pitman arm two inches than to correct four other parts one-half inch each.

JOHN WILKINSON:—Why not strengthen the whole construction?

HOWARD E. COFFIN:—Gentlemen, most of us are making our living in the automobile business by producing something which can be sold to the consumer to his considerable satisfaction and to the considerable satisfaction also of the head of the business with which we are connected. I would say, therefore, that when we can design such a car that our entire season's output is over-sold to satisfied customers, and when our

Digitized by Google

repair departments begin to kick because their business is falling off, we are arriving somewhere near the ideal from the American motor car manufacturers' standpoint.

Practically all of us have avoided the question of the six-cylinder versus the four-cylinder engine. Practically the entire construction of the car from the flywheel backward, as well as from the flywheel forward, depends upon the type of engine we are going to use. The number of speeds of the gear-box depends upon that. Referring to Mr. Clayden's paper I take issue with him on some of the statements in the first paragraph. In the first place, he says that "For a given power a six-cylinder car must necessarily be considerably heavier than a four-cylinder." I object to that, and on pretty good grounds. "Add to this, increased cost for a given power." I object very much to that. Increased cost per cubic inch of displacement cannot be found when you are building 10,000 or more engines in the factory. "Decrease of available body space." The available body space is largely dependent on our ideas of the shape of the hood and the proportion which the length of hood should bear to the car. It is not an unusual sight at all in an American car, or European either, to see four to six inches of the hood space lost in order to get a good balanced appearance. Now, in regard to the piston displacement of the six, many who talk four versus six cylinders seem to have in mind that when one says "six-cylinder engine" one must necessarily mean something big enough to drive a locomotive. We all began there and some of us have never gotten away from it. Few European builders have ever tried to make a small six-cylinder car.

As to the more or less theoretical question of whether the six-cylinder engine is more or less efficient than the four of the same piston displacement, on the block in the laboratory it is possible you can find a difference. It is a pretty minute difference. In the automobile on the road the six will clean up the four every time. This opinion is based on an experience in building a great many thousand machines of both types with the same piston displacement.

Six-cylinder carburetion, for some reason, has never given our own manufacturing end any particular trouble. Possibly we do not strive for the ultimate as an ideal, but when we get a much better mileage per gallon on the six-cylinder, the practical ideal is reached. Mr. Clayden says, "The position of the six-cylinder car in Europe is misleading because no effort has been given to the production of a really efficient six-cylinder," and then he mentions one or two concerns which have, of course, produced wonderful cars.

Mr. Clayden says that seven bearings should be used on the crankshaft. I would say that it is very much more important to use three bearings and get the cylinders close together, as one can thus shorten the crankshaft and make it very stiff and rigid. This is far more important than are seven bearings, because the trouble on the six-cylinder crankshaft is not from deflection, but from twist throughout its length.

As to crankshaft diameter, Mr. Clayden is a little on the high side, as he was on chains. I would say that 2¼ inches diameter is ample.

Digitized by Google

In the method of casting cylinders and as to weight of crankcase, I again disagree with Mr. Clayden. We produce a very much more rigid engine by casting cylinders en bloc than in putting excess weight into the crankcase. On the gear-box proposition, it is always rather a joke to me to hear engineers in America discussing the four-speed transmission. The average American driver does not want to change gears and he will not do so if he can help it; so why give him extra gears when three speeds with a small six-cylinder engine will give him every bit of flexibility he can desire?

On the question of the small four-cylinder engine, if any of you has an idea that the European type of the high-speed variety with the small bore and long stroke characteristic, is a light engine, weigh one of them. It is about the heaviest sort of engine that has ever been built. Furthermore, it is about the most expensive. I think there is no question whatever but that you can build a small six-cylinder engine of the same piston displacement as one of these European high-speed fours, which will do everything that the four will do, and run more smoothly, for a great deal less money than you can build this type of four. The owner has to pay for what the manufacturer puts in the car, so if you can save him money in first cost and upkeep with some other system of motor construction, our feeling is that we should give the customer the benefit of the saving.

In connection with the question of periodic vibration I would like to say that on the 3½" x 5" six-cylinder last year we used a 1⅞" crankshaft. We did get into some of the vibration difficulty mentioned by Mr. Clayden, due to the twist of the shaft. There is a great improvement in the smoothness of running of the same engine in the 1915 cars with a 2-inch crankshaft. The ⅛-inch added diameter has eliminated the difficulty we had on this point.

Mr. Brush will tell you, with his very theoretical turn of mind, that every one of the cranks on the six or four ought to be counterweighted at each throw. I agree with Mr. Brush that this is right. But from a commercial standpoint it is not a very feasible thing to do. I think the main question underlying the individual's "ideal" of a car must be this—"Shall it be a four or a six?" This question influences all the other specifications of the car.

I think Mr. Clayden's idea of placing the flywheel in front is hardly borne out by the experience most of us have had.

Two years ago we built a four-cylinder engine of 280 cubic inches piston displacement, the cylinders being 4⅛" bore by 5¼" stroke. We have built during this past year a six-cylinder 3½ by 5, of 288 cubic inches displacement, only 8 cubic inches difference. The block of cylinders on the small six can be bored in quicker time than the four, because of the smaller diameter. It is all done at once anyway. We have here the suggestion that the crankshaft is more expensive. A year ago we were producing about twenty to twenty-two four-throw cranks per machine per man, in both roughing and grinding operations. This year we

Digitized by Google

are producing somewhere in the neighborhood of thirty-two to thirty-four six-cylinder cranks under exactly the same conditions. We might get a few more fours under the same conditions, but at any rate the difference in cost of this particular item cannot amount to much when cranks are produced in quantities at such a rate.

Three-point suspension we have never built for the market, because we think that with it we cannot build a car that will run as smoothly and with as little vibration. The idea of having the windshield set at forty-five degrees is not a good one. Any of you who has ever turned a ventilated shield back at an angle and tried to look through it when passing under trees or other objects overhead, knows that you get reflections which give more or less trouble.

A. L. McMurtry:—I think that the first supposedly ideal car ever built in this country was the Pan-American car, brought out in 1903 by Albert C. Bostwick. He had a number of foreign cars of his own, and made an extensive study of them, and then attempted to incorporate all the good points of the various cars into one ideal car.

It is my opinion that a discussion of this kind brought about the existence of the Roll-Royce car. In discussing the ideal car one is led to believe that it will do almost anything that any other car will do, which, I think, is entirely wrong. The great trouble to-day is that the drivers of cars try to do with a small car what a large car will do. This is mainly the result of the salesmen's statements. If you are going to build a mechanically ideal car it is necessary to restrict the use of the car.

Of four test cars I have, three are left-hand-drive and one right-hand. When I am driving for pleasure on country roads I always take the right-hand-drive car. In connection with the dazzling effect of electric headlights, with the left-hand-drive car the driver is in the beam of the headlight of the other car very much longer than with a right-hand-drive car. On most left-hand cars the change-speed lever is mounted directly over the gear-box in the center of the car, which makes it rather awkward to change gears, especially in the right-hand forward position, and where the brake lever is placed on the right of the change-speed lever the room for the passenger is lessened considerably, and effective operation of the brake lever is difficult.

Where a chauffeur is employed to drive the car, the left-hand car is best. giving the passenger access to the sidewalk, but for my own use I much prefer the right-hand-drive car. With the left-hand drive, when passing a car on the road, it is a matter of how much you miss the other car and not how much room you can give it.

Herbert Chase:—In my paper I said I rather preferred the four to the six. Mr. Coffin has made a defence of the six, largely on the ground that it is cheaper to make. Possibly it is about as cheap to machine a six-cylinder casting as one with four cylinders. There must, however, be some extra cost attached to the manufacture of two extra pistons and rods, to say nothing of the extra valve parts and the fitting of the extra

Digitized by Google

bearings. With the great advance in manufacturing methods it may be quite as cheap to make a "six" nowadays as it was to make a "four" a few years ago. But using modern methods in both cases there must be a considerable saving in favor of the "four."

I would like to ask Mr. Coffin if he really thinks the difference in operation is noticeable. I doubt if one person in ten can distinguish any difference in operation between two cars of equal power, both equipped with smooth running engines, one a "four" and the other a "six."

HOWARD E. COFFIN:—I would say that there would be no question in the man's mind as to which engine he was behind at the end of a 200-mile run.

A. P. BRUSH:—We all think we admire an unprejudiced and non-partisan man. We owe too much to highly prejudiced partisan minds, I think, to justify that opinion. I think Mr. Coffin's position in the industry is too well known and too thoroughly understood not to realize that we must depend on the prejudiced and partisan mind for progress.

There is, I think, a broad general line of progress which is quite independent of whether the car be a four or a six; and I very carefully tried to confine myself in my discussion of the lines of progress to those which would be equally applicable to cars of the four- and the six-cylinder type.

Mr. Wilkinson said something about the one hoss shay, than which there is no better comparison for the ideal. I have no idea that Mr. Wilkinson meant that the ideal car should run a specified time and fall down all at once; what I think he meant and what I think we all ought to aim at, is a car that when produced in quantities and put into the hands of people who buy and use them, will not have any predominating weakness, the "complaints" being fairly equally distributed over the whole car structure. Then, and only then, can the engineer feel that in the car of the size and type which he has originated, he has fulfilled the duties of an engineer as regards the proportioning of parts. I think that is Mr. Wilkinson's idea.

I hope that before the close of this discussion a motion will be made looking toward a continuance of it, dividing it up into classifications which will permit us to be more specific. One important classification would be progressive car features with respect to obtainable cost, which would naturally let us take up those features which we think should go into cars of a given price.

C. E. DAVIS:—I quite agree with Mr. Brush. The suggestions that have been thrown out are of value in that they focus our thought in certain directions. It is very easy to eliminate the unimportant and concentrate on the important. But when you take the car as a whole, the unimportant and the important parts must be considered.

COKER F. CLARKSON,
Secretary.

Digitized by Google

SOCIETY OF AUTOMOBILE ENGINEERS

TREASURER'S REPORT.

FOR THE PERIOD ENDING SEPTEMBER 30, 1914.

Balance in Bank Oct. 1, 1913	$2,412.72	
Balance in Office Oct. 1, 1913	.23	$2,412.95
Receipts.		
Dues, 1912	$160.00	
Dues, 1913	1,120.00	
Dues, 1914	19,660.35	
Dues, 1915	955.00	
Initiations	5,825.00	
Pins	676.10	
Folders	440.50	
Publications	543.81	
Binders	16.80	
Interest	263.36	
Miscellaneous	218.83	
General Committee on Arrangements	2,912.69	
Other income	1,750.00	
Traveling Expense Refund	49.62	34,592.06
		$37,005.01

Digitized by Google

Disbursements.

Salaries	$11,790.42	
Postage	1,667.09	
Pins	507.99	
Folders	190.70	
Publications	6,746.98	
Rent	2,421.70	
Telephone and Telegraph	409.66	
Carfare	18.00	
Auditing	412.15	
Stationery and Supplies	1,557.18	
Expressage	657.38	
Miscellaneous	710.54	
Standards Committee	452.97	
Petty Cash	25.00	
Furniture and Fixtures	157.25	
Binder Stock	5.60	
Library Expense	34.65	
Donaldson Monument	77.00	
Refund 1914 Dues	20.00	
Meetings, 1914	601.76	
H. F. Cuntz	250.00	
General Committee on Arrangements	3,037.20	
Bills payable	1,000.00	
Interest	120.00	
Traveling Expense	150.00	
Reporting	330.50	33,351.72
Balance		$3,653.29
Checking Account	$1,653.29	
Certificate of Deposit	2,000.00	3,653.29

I hereby certify that the above statement is correct.

H. D. DABNEY,
Public Accountant.

Oct. 13, 1914.

Digitized by Google

PAPERS PRESENTED AT MEETINGS OF SECTIONS OF THE SOCIETY

DETROIT SECTION

ELECTRIC GEAR-SHIFTING ELECTROMAGNETS

By Charles R. Underhill

(Associate of the Society)

The elementary action of electromagnets in general may be described briefly as follows: Connect a straight electrical conductor to a source of direct current, such as a battery, and current will flow through the conductor. Around this conductor will then exist a magnetic field of force at right angle to the axis of the conductor, due to the current in the conductor. By forming the conductor into a circle, the magnetic field is intensified, since all of the magnetism must pass through the ring or loop of current in the conductor. Calling the magnetic field "flux," we say that the flux density is increased by looping the current-carrying conductor. By winding several loops of conductor, side by side, and with a common axis, the density of the flux is increased. Such a helix of current-carrying conductor is called a *solenoid*. The windings of solenoids generally consist of many layers of insulated copper wire, each layer consisting of a helix of many turns. The physical dimensions of the wound coil, together with the cross-section of the conductor, determine the magnetizing force generated and the power consumed in generating this force, in the solenoid, per unit of applied e.m.f. The presence of iron in the core hole of the solenoid increases the flux, since iron is a better magnetic conductor than air. In other words, an iron core surrounded by a coil of wire through which current is flowing will have therein a great many more times as much flux as will the air core of the coil only. Such a

Digitized by Google

coil of wire with an iron core constitutes a bar electromagnet, and from this simple bar electromagnet are evolved all of the commercial types of electromagnets. For instance, if the iron core be free to move and current is flowing through the winding, force will be required to withdraw the iron core from the coil. This constitutes a simple solenoid and plunger.

If the core be fastened rigidly within the coil, and with current flowing through the coil, ferric materials will be attracted to the core, but with relatively small force, owing to its so-called open magnetic circuit. In order to obtain a very strong pull through a very short distance, we bend the core and coil into the form of a horseshoe when we obtain a horseshoe electromagnet, which may be made in many ways. This horseshoe electromagnet is particularly adapted to holding a load, since, when the armature is placed across both pole-pieces of the horseshoe electromagnet, the magnetic circuit is completed, which causes the magnetic circuit to possess a low reluctance or magnetic resistance and permits a larger flow of flux, thus giving the magnet great attracting power. If, however, the armature is separated for even a comparatively short distance from the pole-ends of the cores, the pull will be found to be exceedingly weak. In other words, this type of electromagnet is not suitable for heavy duty through a considerable range of action or stroke. If there was no magnetic reluctance in the magnetic circuit of the horseshoe electromagnet, excepting in the air gap, the pull in the air gap due to the contraction of the flux, would vary inversely as the square of the length of the air gap. However, there is always some reluctance in any magnetic circuit, so that the maximum pull between any two attracting areas occurs when the reluctance of the air gap is equal to the sum of the reluctance of all other parts of the magnetic circuit.

For a long pull and a strong pull, the solenoid and plunger are employed. The action of the solenoid is as follows: Consider a simple coil of wire with current flowing through it and with one end of the iron core or plunger approaching one end of the core-hole of the coil. As the iron core comes within the magnetic field of the solenoid the iron core becomes magnetized by induction, which really means that the presence of the iron in the magnetic circuit of the solenoid decreases the reluctance of the magnetic circuit at this point; but right here is a good place to mention the magnetic circuit of the iron bar which is now partly magnetized. Consider only the part of the iron bar which is within the coil and let the iron bar project any distance whatsoever inside of the coil. Then half of the iron core which is inside of the coil will be of north-seeking polarity and half will be of south-seeking polarity. One might think that the magnetic field of this core would be very weak, but when it is considered that the reluctance of the air or ether surrounding the core is proportional to the average length of the magnetic circuit through it divided by the average cross-sectional area, it is seen that the average length of the magnetic circuit through the air or ether will be somewhat less than the length of core inserted into the coil; whereas, the cross-sectional area will lie somewhere between zero and infinity. Calculations from actual tests made by

Digitized by Google

the author have shown that this reluctance approaches unity in many cases, so that it is possible to have a large amount of flux flowing through the core of the solenoid although the only return circuit is through the medium surrounding the core.

It should be remembered that the magnetic field due to the current in the coil and the magnetic field of the core are two separate and distinct fields, and that it is the attraction between these two fields which causes the plunger to be drawn inside of the coil; all attraction ceasing when the magnetic center of the plunger reaches the magnetic center of the solenoid. The shape of the pull curve may be roughly compared to a part of the sinusoid, as shown by curve *A* in the figure. The plunger becomes more and more magnetized as it passes inside the solenoid until it reaches the point where the pull is maximum; then, as the magnetic centers of the coil and core approach one another, the pull falls off because there is an apparent repulsion. Now, in magnets of the horseshoe type the pull curve approaches that of the rectangular hyperbola as shown in curve *B* in the figure. In other words, the pull keeps getting stronger as the armature approaches the polar faces of the core. It is seen, then, that by combining the solenoid and horseshoe magnet in such a manner that just as soon as the solenoid pull begins to fall off, the horseshoe magnet will take hold so as to keep the curve up, as in curve *C* in the figure, which is the sum of curves *A* and *B* and represents the total pull curve of a plunger electromagnet, a pull may be obtained which will be strong at the beginning of the stroke and stay strong throughout the entire stroke. This is commonly accomplished by surrounding the coil of the bar electromagnet with an iron frame; separating its core into two parts, so that one part shall remain fixed within the coil and to the iron frame, and the other part, known as the plunger, shall be free to move and carry the load.

The length of the fixed part of the core, which is called the stop, varies for different plunger electromagnets, depending upon the degree of magnetization in the core; the physical dimensions of the ferric parts; physical dimensions of the winding; and the length of the stroke. In some cases the best results are obtained when the stop projects approximately one-third into the coil; whereas, in an exceedingly short solenoid, the best results are obtained when the stop is entirely outside of the coil. In the type of solenoid used in the electric gear-shift the end of the frame surrounding the coil acts as the stop or attracting area, which keeps the pull up after the solenoid pull begins to fall off.

The winding of the electromagnet is very important, because, having ascertained the necessary physical dimensions of the magnetic circuit, it is necessary to supply sufficient electric energy in order to properly magnetize the magnetic circuit so that the proper output may be obtained. The ampere-turns vary directly with the voltage across the terminals of the coil and inversely as the resistance of the average turn of wire. It is, then, important to get in as much copper as possible, since the cost of operating will vary inversely with the amount of copper contained

Digitized by Google

within the coil. The total amount of copper in the coil is not only limited by the physical dimensions of the coil, but also by the amount of insulating material which is placed around the wire and within the

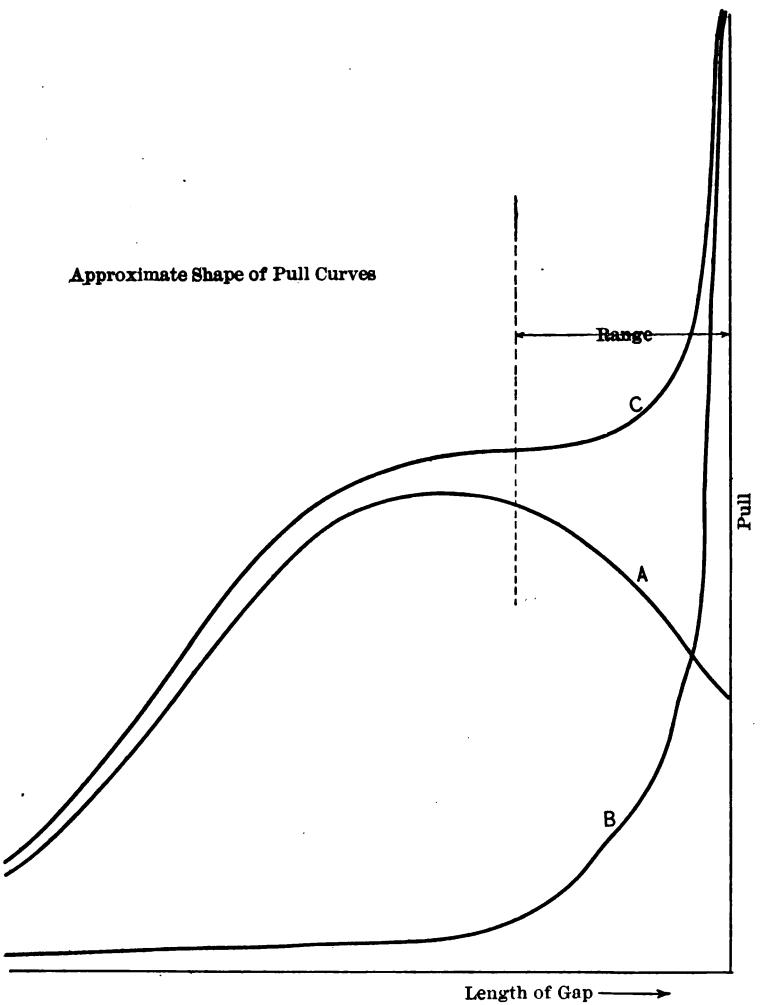

coil. It is, therefore, desirable to keep the insulation on the wire as thin as possible, but it also is necessary that it shall be mechanically strong and chemically inert and such that it can be reinforced by some

Digitized by Google

insulating varnish or compound, after the winding process, to keep out the moisture; and it must not be affected by mineral oils, etc. For this purpose, the coils used in the electric gear-shift are wound with round copper wires having, first, a coat of enamel, which is inert to all the ordinary chemical reagents, and unaffected by mineral oils, even at very high temperatures. The wire is next covered with a coat of cotton for mechanical protection, and as a holder for the filler which is subsequently put into the coil. These coils are form-wound on automatic winding machines of special construction, so arranged as to quickly and accurately produce coils uniform as to greatest permissible tension on the wire, which insures maximum turns, uniform resistance and dimensions of the wound coil. The coils are then supplied with heavy leads, the cross-section of which is greater than that of the wire in the coil in order to prevent excessive loss of energy in the leads. The splices to the leads are soldered and covered with oiled muslin, and protected with fiber to prevent mechanical injury and also any sharp corners or the points of the soldered splices coming into contact with the wire in adjacent turns. The coils are next thoroughly dried and then placed in clear insulating varnish until they are thoroughly impregnated. They are then baked in an oven for a period of thirty-six hours. After the coils are thus treated they are unaffected by moisture or oil.

CURRENT CONSUMPTION

In recent tests made by W. A. McCarrell and the author, on a car equipped with an electric gear-shift, it was found that the average current consumed per shift was 43 amperes, but that the duration of this current was less than one-third second, so that it is possible to obtain approximately 300 shifts per ampere-hour, or, on a 12-volt system, the equivalent to 300 shifts per 12 watt-hours, or 25 shifts per watt-hour.

When an e.m.f. is first applied to a solenoid with an iron core, the core is slightly magnetized, but the rate of change in the magnetic flux in the core produces a counter-e.m.f. in the solenoid, so that the complete magnetization of the core and the maximum current in the solenoid are not attained at once, the time depending upon the physical dimensions of the solenoid, core and conductor. The current-time curve is logarithmic, so that the actual energy consumed in one-third second would be nearer one-half of the values mentioned above; hence, the shifts per watt-hour would be nearer 50. On this basis the shifts per kilowatt-hour would approximate 50,000. This is due to the fact that the current is on but for a brief period, owing to the construction of the switch mechanism of the gear-shift. This particular magnet has a pull of 48 pounds through 1 1/16 inches, with 12 volts and 50 amperes, or 600 watts. The plunger is one inch in diameter. On other coils with 1¼-inch plunger a pull of 50 pounds is obtained through 1 1/16 inches with 6 volts and 66 amperes, or 396 watts. In general, the higher the voltage applied to a coil of fixed physical dimensions, the

Digitized by Google

finer must be the wire and the less the insulation on the wire. However, for the coarser sizes of wire, there is practically no difference in the ratio of copper to wire insulation, so that a coil wound for 12 volts is just as efficient as one wound for 6 volts.

The foregoing shows the importance of correct design for electromagnets in general. The application of electromagnets to electromechanical devices is becoming so general that special designs are required in nearly every case of application. For instance, the diameter and length of the plunger; the position of the air gap inside of the coil; length of the coil; mean length of turn; proper radiating surface, etc., are all dependent upon specific conditions under which the electromagnet is to be used. In general, these conditions may be classified as voltage; initial pull; shape of the pull curve; length of stroke; rapidity of action; character of load to be moved; number of operations per unit of time, etc. The insulation on the wire and between the wire and the containing spool or frame will also depend upon the character of the electromotive force employed. In any case it is necessary to provide ample insulation so that the volts per layer, or rather electromotive force between any two layers, shall not be excessive. It is thus seen that the proper design of an electromagnet to perform a specific duty is an engineering problem which should, in every case, be worked out on the most economical lines in order that the maximum output may be obtained for the minimum input. Stress is laid upon this fact for the reason that within the years of the author's experience in designing and constructing electromagnets and coil windings for many purposes, it appears that the customer generally considers the electromagnetic part of his device as a minor matter and seldom chooses the proper type. This is, of course, natural, when the customer is more familiar with the mechanical device than the electrical. As a rule, more space is required for the electromagnet than is allowed for by the designer. This is partly due to an incorrect understanding of the design of the magnetic circuit, but more often due to an improper amount of radiating surface for the coil.

RELIABILITY

To increase confidence in the matter of shifting gears by electromagnets, I wish to state most emphatically that, in my opinion, these magnets will operate satisfactorily during the life of the car. You have electromagnetic control at every step. Your door bell is rung by coils. Do the coils fail? The electric elevator is started, accelerated, and stopped by solenoids. The most modern signals on railroads and trolleys are operated by electromagnets. The doors are opened and closed by solenoids. The automatic elevators and dumb-waiters are controlled by push buttons and solenoids. The heating of trolley cars and office buildings is automatically controlled by solenoids in connection with thermostats. Consider the enormous field of the telegraph and telephone. Can you imagine anything that has to be more positive and fool-proof than these systems? Yet they are absolutely dependent upon electro-

Digitized by Google

magnets. Solenoids and plunger electromagnets are used to reverse automatically the traverse of the winding machines, because they can be made to reverse the direction of the carriage at points which do not vary even 1/64 inch from the designated position.

A SPECIFIC TYPE

By W. A. McCarrell
(Member of Society)

About twenty years ago appeared what was termed the horseless carriage, a crude affair which during its development was an object of ridicule. Few outside of those sturdy pioneers of the industry could see a future for it and it is doubtful if they pictured in their wildest dreams the great industry which the automobile business is today. Developments went forward. The crude "one-lunger" passed and the four-cylinder car appeared in our midst. Steels were refined to their present

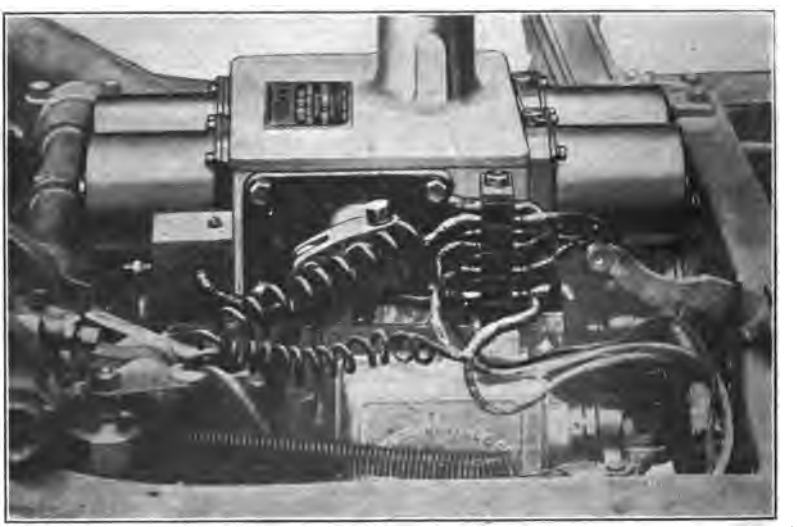

Electric Gear-Shift. Showing right side and neutralizing cam.

state of excellence. Frames and springs were perfected. Clutches and universal joints were developed; axles and transmissions were constantly improved. The lines of the body and its comforts were given every attention until with the coming of the sweet-running six-cylinder car it seemed that the point of perfection was reached. Then came the motor starter; the crank went into the tool box. The drive was changed from right- to left-hand, the control from side to center. But there remained the cumbersome and unsightly gear lever.

Digitized by Google

The electric gear-shift has been developed during the past six years. Devices have been designed for shifting gears mechanically, electrically and with compressed air. The problem presented divided itself into several parts. In order to change gears automatically there must be some means for shifting them, some selective mechanism for determining which gear is to be shifted, and provision for preventing the shifting of gears when the clutch is in engagement. Having in mind the ultimate use of electricity for starting and lighting, progress was made electrically.

One of the original ideas was a device which would not only draw the gears into mesh electrically, but neutralize electrically as well. This, of course, added considerable wiring complications, and was not as dependable as desired. Another development was condensed into a simple compact device wherein the gears are drawn into mesh by a solenoid or electromagnet, and positively drawn to a neutral position mechanically before another gear can be shifted. In a nutshell, the electric gear-shift under discussion is composed of a case which bolts directly on the top or

Electric Gear-Shift. Left side.

side of a transmission, and contains or carries a solenoid or electromagnet for each speed in the transmission; armatures or magnet cores carried by these solenoids, which cores, in turn, carry the forks which engage with the gears in the transmission; a master switch common to all speeds, for closing the circuit after the gears are drawn to a neutral position by the neutral cam; and a selector switch containing a plainly

Digitized by Google

marked button for each speed, and neutral, by means of which the next shift can be selected at the driver's convenience.

The solenoid for each speed in the transmission, when energized, attracts the magnet core or armature which carries the shifter fork, and the gear is carried into engagement. This unit is composed of a cast iron washer into which a brass tube or coil carrier is pressed, and serves as a bearing for the magnet core. A properly wound coil is then pressed on this tube and a pressed steel case placed over it, which not only protects the coil from injury but completes the magnetic field. The units are then securely bolted to the gear-shift case, one for each speed that may be desired, and so arranged that two of them come directly opposite each other front and back, so that the pair carry a magnet core. These magnet cores or armatures are round pieces of steel of such length as to allow a clearance at each end equal to the movement of the gear from a neutral position to full engagement, plus a slight clearance to avoid the possibility of the core striking the end of the solenoid when the gear is drawn into mesh. On each of these cores three notches are provided, one for the interlocks at neutral and the other two for position locks. These interlocks and position locks which engage the magnet cores are carried in the cast iron washer at the end of the coil, the position locks being on the top with the interlocks working between, replacing the usual transmission interlocks. It is impossible to engage another gear while one is in mesh. In addition to the interlock notches, the magnet cores each carry securely fastened to them a fork engaging with a sliding gear in the transmission, and carrying it into mesh when the magnet core is attracted one way or the other. On these forks are provided lugs which engage with the neutral cam when the gears are being drawn mechanically to a neutral position.

Next is the neutral cam, or neutral rocker-arm. This is a rectangular-shaped piece of forged steel, through which the magnet cores pass, and which works on either side of the same in drawing the gears out of mesh. One end of this cam rests in the barrel-shaped bearing on the side of the shift. Two opposite sides of the male portion of the bearing are milled flat at an angle from the perpendicular; when these flats are perpendicular the cam proper stands at an angle, what we may call its normal position, one-eighth of an inch from its total throw. This is accomplished by means of springs, which operate in sliding sleeves in the barrel-shaped portion of this bearing, one on either side, and which balance each other, and in working against the flat on the end of the neutral cam, return it to the normal position when released. The bearing at the other or operating end of the cam lies within the bearing of the operating end, which in turn is carried in a cast iron bearing bolted directly to the side of the gear-shift case. This operating end carries a small dog, which drops into engagement with a shoulder on the neutral rocker arm to pull any gear which may be in mesh to its neutral position, and at the outer end it carries a lever to which the connection to the clutch pedal is made.

The device is provided with a laminated master switch common to all

Digitized by Google

speeds, by means of which the circuit is either closed or broken. This switch has an extension or shaft which enters the case and passes the end of the neutral rocker arm, said shaft being provided with a notch, into which a dog carried on the end of the neutral rocker-arm drops for engaging the switch, the whole being provided with a carrier or bearing bolted directly against the end of the case. The entire master switch may be removed as a unit.

The selector switch, which is carried on the wheel, is composed of a series of buttons, one for each speed, and one for neutral which has no electrical connection. These buttons are provided with arched laminated contacts of copper backed up with a steel spring and insulated from the button proper. The top of the switch carries a locking plate for locking any button which may be depressed, and also an interlock which makes it impossible to hold down more than one button at a time. At the bottom is a hard-rubber base which carries a copper contact for each button and a contact common to all speeds. It also serves as a base for the return springs provided for each button.

The wiring is extremely simple. There is one lead passing from each coil through a terminal block to its particular speed button on the selector switch, while the other lead from the coil is joined to a neutral wire directly through the terminal block to the battery, with the master switch intervening, while another wire passes through the terminal block to the contact on the selector switch, which is common to all speeds. You can, therefore, very readily follow the flow of the current, the same being from one end of the battery through the speed contact on the selector switch, down and around the coil selected, returning through the wire to the other end of battery.

The terminal block is carried on the shifter case to afford convenience in removing the transmission without disturbing the wiring, and is composed of a male and a female terminal for each speed, which are separated from each other by fiber blocks, all being securely clamped together by one through-bolt. These terminals are each of a different size so that should it be desired to pull the wires out, there is no danger of getting them mixed.

OPERATION

Let me impress upon you that the buttons may be pressed at any time without effect, as current is drawn only when a button is down and the clutch pedal fully depressed. When it is desired to start the car, the first-speed button is pressed until it locks. The clutch pedal is then fully down, thus closing the master switch; the coil is energized and the gear is instantly drawn into mesh. Letting in the clutch, the car moves off as usual. Another button may then be pressed without drawing current or affecting a gear already in mesh. When the speed-change is desired, the clutch pedal is depressed, pulling by interconnection on the operating lever, which turns the above-mentioned operating end, which carries the dog engaged with the neutral rocker-arm, causing it to turn and pull against the shifter-fork of the gear already in mesh, taking it

Digitized by Google

to a neutral position. As the gear reaches neutral, the dog is tripped out, and the neutral rocker-arm flies back to its before-mentioned position, ⅛ of an inch from the total throw of the gear. As this rocker-arm is moving forward, the small dog which it carries drops into the aforesaid notch on the stem of the master switch, engaging same, and as it snaps back, carries the master switch into engagement, closing the circuit, when the gear selected instantly jumps into mesh, and when within ⅛ of an inch from being home, strikes the neutral cam, which kicks out the master switch, and the gear carries through of its own momentum; the action being the same for all speeds. When desiring to stop, the neutral button is pressed, which breaks any connection in the selector switch, and the clutch pedal is fully depressed, drawing the gear in mesh to neutral.

One of the beauties of the device is the ability to anticipate the next gear change; that is, when driving in one speed another button can be kept down, and when occasion arises all that is necessary in order to change gears is to throw down the clutch pedal, the hands never leaving the wheel.

You all know that the greatest damage is done to gears when an effort is made to jam them together without fully releasing the clutch. Our magnets are designed to produce a minimum pull of 40 pounds at a distance equal to the throw of the gears, commonly an air gap of 1 1/16 inches. As the gear moves into mesh and the air gap decreases, it is, of course, understood that the magnetic pull increases very rapidly until at an air gap of ¼ inch the coils show a strength varying from 150 to 180 pounds. Should the gears fail to engage instantaneously, therefore, at an air gap of 1 1/16 inches, the magnetic strength is not sufficient to produce any damage, even though a grinding noise is heard, for as the gears time themselves to the proper speed and finally mesh, the magnetic pull increases so rapidly that a full engagement is assured.

No damage can be caused if the throw from high to reverse, or high to first, should be attempted at any speed of the car, for the gears cannot possibly mesh until they have been brought to their proper time ratio. On a test car in Philadelphia throws have been made from high to reverse and high to first at extreme speeds on an average of 50 to 100 times a day for the past year and a half, and the gears allowed to grind for periods ranging from a minute to two and three minutes at each throw without the slightest damage to the transmission. The original transmission is still in the car. While it seemed at first impossible that the transmission would not be absolutely wrecked, an examination of this original transmission made recently failed to show the slightest injury.

You, of course, understand that in driving the clutch pedal may be depressed and the clutch slipped as usual; the action of the clutch pedal being, first, to release the clutch, then to neutralize the gear in mesh, and finally close the master switch.

It may be of interest to know that in a recent trial with a stock car

Digitized by Google

I was able to shift back and forward from second, third and fourth speeds thirty times in twenty seconds, holding the car at fifteen miles an hour.

The electric gear-shift can be adapted to any electric starting and lighting system, irrespective of the voltage; the magnets are wound to suit conditions. Higher voltage, of course, means less amperage, less losses, and permits the use of smaller wires. We find that the best results can be obtained on generating systems with voltages of 12, 18 or 24.

APPLICATION

By Frank N. Nutt
(Member of the Society)

The chief objection to the hand-shift method is, in my opinion, that it is not fast enough to take care of the relative speed between the car and the motor. This may be determined readily anywhere at any time. Watch for a few minutes automobiles start off and listen to the noise which invariably accompanies the shifting of gears. This noise is more or less dependent upon the action of the clutch and the skill of the driver. It does not signify that the clutch is at fault, nor that the method of changing gears is crude, but that the hand-shift method does not provide an efficient means whereby the average driver can shift gears noiselessly.

The electric gear-shifting device possesses a great many more features than merely that with its use the driver can shift gears silently and smoothly at all times, but to me that is the paramount feature. In the fall of 1911 I first learned of the various devices for shifting gears automatically, and was immediately interested. During the 1912 New York Automobile Show I had an opportunity of seeing and operating one of these devices. I was very favorably impressed with the silent manner in which the gears were shifted, thus overcoming my chief objection to the hand-shift method, and also with the rapidity with which shifts were made. I traveled around the city through its most congested districts, finally taking the wheel myself and shifting repeatedly from one speed to another. The manner in which the car responded led me at that time to believe that the question of gear-shifting had at last been satisfactorily solved—a point on which I am now thoroughly convinced. The first device for the Haynes car was built specially for the reason that I wanted it sufficiently high to clear the clutch-operating mechanism and cross members, to enable me to experiment with different sized coils, and in this way ascertain the proper pull for satisfactory shifting. Originally the solenoids were wound for a twenty-pound pull with 1 1/16-inch stroke. Testing proved, however, that a forty-pound pull with the same stroke was more satisfactory, the ques-

Digitized by Google

tion of heavy lubricants, which become thickened in cold weather, governing my decision in this matter to some extent. The next step was to secure a satisfactory mechanical connection between the clutch pedal and the neutralizing cam of the gear-shift, which practically necessitated re-designing the gear-shift to insure simple and positive mechanical engagement and operation. After the work of re-designing was completed, the gear-shift unit took the place of our standard transmission lid and eliminated all shift-rods, forks and interlocking devices previously used in connection with the hand-shift method, as these parts were embodied in the gear-shift itself.

There is no question but that the use of the electric gear-shift eliminates the possibility of wearing and stripping of the gears, due to the fact that it is absolutely necessary that the clutch be all the way out before the gear-shift will act. The very principle of the device overcomes the possibility of stripping gears. Besides driving my own car daily to and from business, I have made extensive trips all over the Middle West. This car is not equipped with an auxiliary hand shift and never has been. I have had no occasion to even raise the floor-board, and have traveled more than 12,000 miles.

DISCUSSION

W. H. Conant.—The storage battery is to the shifting device what the engine is to the car; it drives it, operates it, and must be considered, if not first, in a very important way. Since there has been no paper read upon this, I would like to emphasize the importance of selecting batteries that are large enough. To some extent batteries are consumed; they do not have a life corresponding to that of mechanical parts. If they are large enough at the outset, the life is so much greater that there is no comparison between it and the limited life that can be obtained if they are too small. Every season new devices are being brought out for use on cars, to be operated either wholly or in part by storage battery, with no provision for increased battery size; and I fear that insufficient thought is being given to the motive power that must handle this load. Electrical devices undoubtedly will increase. Perhaps we will use electric transmissions. Incidental to such important changes are the smaller devices that are being sold for use on cars. Almost every month we hear of some new device. We cannot afford to overlook the importance of having sufficient battery.

The use of electricity opens up a new field on gas cars. There are many things possible now that were not possible before. The device described tonight simplifies and even removes some of the problems that have confronted us. We will find, as we advance in knowledge of and experience with electricity on cars, that still further fields will be open.

I think that every contrivance that is to be operated by the battery is claimed to be very economical. The tests cited tonight cannot be

Digitized by Google

questioned; they are absolutely correct under normal conditions. But the word "normal" is frequently used in place of "ideal." In fact, one of the papers touched upon the point that tests had been made to determine whether damage would be done to the gears by letting them grind. Every time the gears fail to mesh immediately because of abuse a draft of current more or less severe while it lasts is going on. Every time it takes longer than usual to start the car, the motor is drawing extra current. Every time anything goes wrong in the electrical connections, current is being taken out.

This device is undoubtedly a great step forward. I think we are going to come to some such thing, but I believe we have not yet reached the point where we can absolutely avoid any chance of short-circuit and that means a very considerable loss of current. Hitherto solenoids have always been used on an unlimited supply of current. They have been connected to lighting or power mains. If anything goes wrong in the switch or in the connection, so that the coil is left permanently on the line, the coil heats up and burns out or the fuse burns out.

The storage battery has a function that has not yet appealed to engineers, in that it is an emergency device. It presents a factor of safety. The large electric light companies and the street railway companies spend enormous sums of money for batteries simply as stand-bys. In this city there are many batteries, running into six figures of cost, that are not used more than once a year, but that once a year is the time when the batteries pay for themselves. Here is a new thought for consideration. The storage battery is an infallible source of power for any use to which you may put it. Therefore, if large enough batteries are used, you are prepared for the emergencies that must constantly arise.

My other thought is that batteries should be made more accessible or that those of you who do make them accessible should continue to have the courage of your convictions. We must not look with too much contempt upon the electric car or its early days, for many things that still ring true were learned. The tendency today is to take the batteries off the running-board because they look bad or to keep them out of sight because they do not help the general lines of the car. Years ago in the electrical vehicle field they faced the same objection, but found that the battery is too important to be hidden under a bushel. It must be made thoroughly accessible. You will bear me out, I think, in that point. Engines used to be put under the floor or seat or in some place where they would not be conspicuous; yet you found it necessary to put them out where they could be immediately accessible. As you go along with batteries you will find it good practice and advisable, I believe, to put them in a prominent place. This is not because the battery needs constant attention; it is not because it needs frequent adjustment. But so long as it is easier to give it proper attention, it is more certain of getting reasonable attention; the storage battery, like any other thing made by man, cannot be made infallible. It must have periodical attention just the same as anything else produced or manufactured. Just *where* the battery should be placed is something quite beyond the scope

Digitized by Google

of this discussion, but I am confident you will evolve a position for it that will insure better attention, keeping the battery from injury and serious depreciation in operation.

W. A. McCarrell.—I would like to speak of a test that was made several months ago upon a Haynes car. Mr. R. J. Nightengale came down to Kokomo with the express intention of wrecking the battery on that car if he could. He thought that the gear-shift would put it out of business. Mr. Nightengale, Mr. Lease and I started with the car and traveled probably 500 miles, burning the lights night and day, shifting under all kinds of conditions. When we took hydrometer readings at the end of the test we found the battery in better condition than when we started out. Mr. Conant brought out a point as to burning out of the coils if the switch mechanism should stick. On the device as it stands, that is an absolute impossibility. There are three methods of breaking the circuit. First, if the gear goes into mesh it automatically kicks out the switch. If a man lets his clutch pedal back, if he has depressed it, there is an absolute cam movement which will break the circuit. If no button is pressed, the current is broken in the selector switch. We have yet to find one coil that did burn out. On the mechanism as it stands, you must absolutely short-circuit two wires at once in order to draw current from the battery. We do not ground back to the frame in any shape at all.

F. N. Nutt.—Last year we used an 80-ampere hour 12-volt battery. This year we use a 60-ampere hour 12-volt battery. I think that answers the question.

H. L. Connell.—I take it from what Mr. McCarrell said about the coils burning out that there are no fuse wires.

W. A. McCarrell.—No fuse wires at all.

H. L. Connell.—Is there an emergency gear lever?

W. A. McCarrell.—That is entirely at the manufacturer's option. In this particular device there is one, but simply as a selling feature. The question is often asked by a customer, "Well, suppose something should go wrong?" You try to tell him it will not. Suppose it should. We tell him to unscrew the cap, drop a little short handle in and shift by hand. We provide lugs for that purpose.

A Member.—I would like to ask about the amount of pull necessary to start the gear-shift. In the car I have been driving recently I had trouble with the second gear sliding out. In order to determine whether the stops were in good condition I put a spring on the shifting-rod on which the forks are mounted, and found it took 90 pounds to pull the stop out of position, in spite of that fact it did not hold the gears in mesh. If the stops have been weakened so that 40-pound magnets will start them, it seems to me the danger of sliding out of position would be greater; and that the automobile manufacturers in making springs so that they actually take 90 pounds to start them, did so with a purpose.

Digitized by Google

W. A. McCarrell.—The lock that holds the gears in neutral position is weak. It simply has to hold the weight of the gear so that we can provide for a weak load. The meshed-position lock is, however, very stiff, as stiff as you can make it for hand-shifting. The 40-pounds pull is only against the neutral interlock spring. Our neutralizing cam will carry the gear only as far as the neutral position. You cannot push it beyond neutral position.

A Member.—Suppose you are running along at high speed, and, wanting to stop suddenly, throw the clutch away down, losing control of the gear, which, I understand, goes to neutral every time the clutch pedal is thrown down.

W. A. McCarrell.—If the proper button is down, no matter how often you throw the clutch clear through, the gear will shoot right back again into mesh.

A Member.—I would like to know the action of the mechanism in engaging high gear in cold weather, with enough congealed oil in the clutch that the release mechanism could not be tripped out. Mr. McCarrell stated that it has to come within one-eighth of an inch of the full throw before the switch disconnects the solenoid.

W. A. McCarrell.—In case the gear did not mesh far enough to automatically break the circuit when the clutch is let back in, the return of the clutch pedal would automatically work the small cam which trips the dog that engages the master switch.

A Member.—In most cars there is a short shift to high-gear position. If that shift is not completed very likely the gear will jump out.

W. A. McCarrell.—That will depend entirely on whether it went into position, the same as in hand-shifting. The condition is exactly the same as with a hand lever.

A Member.—If the gear did jump out, how would you get it in again?

W. A. McCarrell.—By throwing the clutch pedal down again.

A Member.—Pushing it down until the gear stays in?

W. A. McCarrell.—Yes.

Chairman E. T. Birdsall.—How does the mechanism act if you have a multiple-disc clutch and the oil is too thick? It is well known that in cold weather this type of clutch has a tendency to drag so that it is very difficult to come down, say, from third to second.

W. A. McCarrell.—The clutch dragging would probably give a little clash as you go up, but coming back it would benefit matters; as you throw it down to neutral it would catch the natural acceleration of the engine.

C. T. Myers.—It would not do that unless you were accelerating the motor, would it?

W. A. McCarrell.—In falling back?

C. T. Myers.—Yes.

W. A. McCarrell.—When you come to neutral and release the weight of the car from the engine there is a natural acceleration of the engine.

Digitized by Google

C. T. MYERS.—Not necessarily, if the hand throttle is set for an idling speed.

W. A. MCCARRELL.—It would give a little clash until you got the proper speed. A little touch on your accelerator would shoot you right in.

PNEUMATIC GEAR-SHIFTING

W. D. BURFORD:—In designing a mechanically operated gear-shifting device for selective-sliding gear transmission, we are confronted by several interesting problems. First, there must be no chance of any gear being brought into mesh while the clutch is engaged. Second, the device must be positive as to the selection of the gear ratio desired. Third, it must shift the gears at a speed that will prevent clashing while the disengaged gears are rotating. Fourth, its operation must require little or no effort on the part of the driver. The first problem, that of not engaging any gear while the clutch is seated, has been overcome in a very simple manner in pneumatic gear-shifting. The valve control is connected direct to the clutch pedal in such a manner that the pedal has a free movement until the clutch slips, after which the first port action occurs, admitting air to the front end of the cylinder. This drives the piston back, throwing all gears into neutral. Then as the clutch pedal pushes further, another set of ports is opened, closing the first set and admitting air to the opposite end of the cylinder, driving the piston back and selecting whatever gear the selector is connected with at the time. The gear is connected with a lever on a quadrant mounted just below the steering wheel in a position where it is reached readily by the fingers. The lever is shifted to any position excepting reverse without touching the button.

We use a tank, in some cases 11" x 33", in the rear of the car; where we put it underneath the body we use a 7" x 48" seamless steel tank, tinned inside and out. A pressure of not less than 50 pounds is advised in the operation of the device. With the car that I am driving a good deal the pressure frequently runs down, however, to 25 pounds, the device operating with perfect satisfaction I have operated with a pressure up to 300 pounds, which simply gives a little snappier action. The question has been asked frequently what would happen if the air pressure were lost. An emergency device that covers that very satisfactorily has been worked out; a lever carried in the tool-kit to be used if necessary by dropping through a hole in the footboard, engaging a slot, actuating the piston mechanism. A machine with one of the devices was driven for 29,000 miles through the West, in the mountains and out through Canada, and the emergency lever was never resorted to. If a tank puncture had occurred it would have been necessary to use it.

ERNEST R. FRIED:—Can you explain why the gears should not clash?

Digitized by Google

W. D. BURFORD:—I cannot. Whether it is because of the extra speed at which the machine operates, I do not know. Men who have told me they were chronic gear strippers have used this device and you could not hear hear them get away. The exhaust is piped into the muffler, if desired. About 150 used cars have been equipped, aside from the demonstrators put out, mostly in Illinois and Iowa. The men who drive them say the device is practically fool-proof. Outside of the operation of selecting the gear you want, it is practically automatic.

A. W. COPELAND:—Is it always positive? Can you throw the clutch out too quickly and pass the neutral opening?

W. D. BURFORD:—A little trouble with that was experienced in the second type of machine put out. It was found that the first set of ports passed too quickly; that a green driver, for instance, would jam the clutch quickly and sweep past neutral. The hole was elongated so that the port had a longer time to pass.

A. W. COPELAND:—It is not possible now to miss shifting the gear?

W. D. BURFORD:—I have tried to make the device miss and have not succeeded. Men not used to driving an automobile were permitted to operate the device and watched to see if they could make it miss. I have never seen the device fail, providing the air pressure was above 25 pounds, with a transmission in proper order. I have seen one or two cars in which the gears did not shift very well at 40 pounds pressure. We found the transmission was not in good condition. Most of our experience outside of some twelve or fourteen cars, has been with used cars; some were regular arks.

CHAIRMAN E. T. BIRDSALL:—Can you set the lever for any shift before you want to shift?

W. D. BURFORD:—Yes. Suppose you are in third; you can have the indicator back at reverse and it will not make any difference. It would not be advisable to do that, however. The location of the lever has absolutely nothing to do with the gear that is in mesh, until after the clutch pedal is depressed. The minute you push the clutch pedal in, you go to neutral, and as you go on through get whatever gear is indicated on the selector.

We have some pretty steep hills in our region. I drive with the indicator lever set on second all the time. If I am running on third, the minute the motor commences to labor I shove the clutch pedal in and I am on second. If I think I will have to go to first, I shove the indicator lever down and leave it there; when I can no longer run on second, I push the clutch in again and go to first.

ALLEN LOOMIS:—Does this method of shifting gears cause any wear on the gear teeth?

W. D. BURFORD:—It causes considerably less than the present method of shifting, because the shock is taken on the ends of the piston. With the air cushion there is not as much slamming as in the present method of shifting. When the shift starts, it goes in with a "bang." You get no clash and do not burr the gears as in shifting by hand.

Digitized by Google

ALLEN LOOMIS:—If all the gears go to neutral every time the clutch is thrown out, does this not tend to cause more wear on the end of the gear teeth?

W. D. BURFORD:—I presume it would, theoretically. All we have to go by is our practice. I personally examined the transmission that made 29,000 miles, and found it in better condition than the conventional transmission in my car which has run only 11,000 miles. I think I am not a hard driver either.

I have gone from third to first scores of times with the pneumatic device with perfect success, never failing once.

GEORGE W. DUNHAM:—If the car was going at any considerable speed when that was done, it would give the passengers the sensation of having the brake applied.

W. D. BURFORD:—Of course, it would throw me almost to the dash if I put the clutch back quickly.

CHAIRMAN E. T. BIRDSALL:—On a car with rear-axle transmission, is the device placed on the transmission?

W. D. BURFORD:—Integral with the transmission case, wherever it is, in original installation. We equipped a car with a rear axle transmission recently, putting the device amidships, carrying the rods back to the rear axle.

Mr. FLEET:—How many valves are necessary?

W. D. BURFORD:—One main valve which has a rubber composition seat; an ordinary poppet valve lifted by a bell-crank in a sliding rod pulled by the clutch pedal. The ports are controlled by a sliding valve, which is like a Corliss valve, acting merely as a distributor. The main valve will hold 200 pounds of air. A sleeve valve was originally used, but it is not necessary.

CHAIRMAN E. T. BIRDSALL:—The tank seems very large. Could that not be reduced? The 11" x 33" tank must weigh 40 or 50 pounds.

W. D. BURFORD:—The reason that tank is used is that a rotary starter is combined with the equipment. It is a much larger tank than is necessary for the gear-shifting. I put on two or three pneumatic gear-shifts with a tank the size of a Presolite tank. Of course, in that case you have to run the pump oftener.

C. C. HINKLEY:—Is there an automatic control on the pump to maintain pressure?

W. D. BURFORD:—A diaphragm control is being tested out now. Four or five of them, in the experimental stage, are being tried out We turn the air on at 100 or 125, and turn it off at 175.

STEPHEN I. FEKETE:—How many ports are there?

W. D. BURFORD:—One central cylinder operates the whole machine. Two ports are drilled into that. The sliding valve, which is nothing but a rod, a screw machine product turned up oversize and ground, has five grooves in it; one of these grooves operates the bell crank, and the others act as circular ports.

Digitized by Google

A MEMBER:—How much weight do you add to the car?

W. D. BURFORD:—One hundred and twenty pounds, including the air starter. The shift itself weighs 20 pounds; less than that as a factory proposition. You can have it in front or back of the transmission. That is why the rods are slotted on both ends. With an ordinary amidships transmission, where we get behind the transmission, the rods are cut off at the back end.

A MEMBER:—What is the diameter of the piston valve?

W. D. BURFORD:—Two inches. The total stroke is 1/16". That is fixed. No case has yet been found where shifting could not be accomplished with this stroke. Multiplication is had with shifting fingers on a sleeve or bell-crank, according to the condition to be met.

CHAIRMAN E. T. BIRDSALL:—If it was built in the transmission?

W. D. BURFORD:—The design would have to be changed.

CHAIRMAN E. T. BIRDSALL:—Then you would make the stroke to suit?

W. D. BURFORD:—Yes.

ERNEST R. FRIED:—You have a good-sized tank. You have the shifting device. The operation is just about the same as the operation of the present gear-shifting device. You have to push out the clutch, you have to move a lever; whether the lever is short or long does not make much difference. The effort to shift gears with the hand lever is not great. You add a good deal of weight to the car; you add more mechanism; it is more liable to get out of order, and cost more.

W. D. BURFORD:—You are going on the theory that the present method of shifting gears is good enough?

ERNEST R. FRIED:—I do not see why we should use such an automatic gear-shift.

W. D. BURFORD:—The present method of shifting gears does more to keep people from using cars than any other one thing.

CHAIRMAN E. T. BIRDSALL:—Have you put the device on a four-speed box? On some four-speed boxes you go through the first into reverse. Can you do that?

W. D. BURFORD:—No, we cannot go through; we have to have five slots.

CHAIRMAN E. T. BIRDSALL:—You have to have three shifting levers?

W. D. BURFORD:—Yes; we cannot handle the progressive type of sliding-gear transmission with this device.

CHAIRMAN E. T. BIRDSALL:—On a car already in use, what does it cost to install the device?

W D. BURFORD:—Agents sell the equipment, including a pump, tank and shift, for $200.00. It costs about $12.00 to $20.00 to put it on a used car. That has been our experience. We pay 40 cents an hour for labor.

M. A. SMITH:—Do you install the device without a motor starter?

W. D. BURFORD:—Yes. A 7" x 30" tank is furnished for an electric-starter equipped car.

Digitized by Google

E. V. RIPPINGILLE:—Have you had any experience with the device working in zero weather?

W. D. BURFORD:—The one referred to has been driven two winters. It was 37 below zero in Wisconsin at times. The car was driven every day without a bit of trouble.

E. V. RIPPINGILLE:—At what pressure was it operating then?

W. D. BURFORD:—About a hundred.

CHAIRMAN E. T. BIRDSALL:—Mr. Burford, or his company, has had the same experience that everybody has had in holding compressed air at high pressures. That is, a rubber-seated valve is the only thing that will hold it. I had about a year's experience with that. While I hated to use rubber or anything of that sort, yet I was forced to do so. Rubber will absolutely hold the air. Nothing else we could find will. With just enough rubber in a composition to hold a seat, we have had seats with brass chips in them, which still held the air. All the air-brake people, and everybody using compressed air, have all come to some such material for the valve; that is, where they expect to hold air without leakage. In the matter of piping joints, it is simply a question of making them large enough, and screwing them up hard enough. On my car I solder everything from one end to the other. It is very easy to break a soldered joint on a good heavy coupling. If the joint is sweated full of solder you know that it is air-tight.

SECRETARY H. L. CONNELL:—To what pressure are the tanks tested, to be sure there is no danger?

W. D. BURFORD:—Six hundred pounds.

SECRETARY H. L. CONNELL:—Is the pump so arranged that there is no danger of going up to that pressure, or do you simply control it by reading the pressure gage when shutting off the pump?

W. D. BURFORD:—Our automatic control will take care of that. That is still in the experimental stage.

CHAIRMAN E. T. BIRDSALL:—If Mr. Burford has had the same experience with automatics we have had he will continue the use of some plain foot pedal. It is a very simple device, and never fails to work when you push it or trip it.

W. D. BURFORD:—As for getting the pressure up to 600, we have not yet found any pump that will do that.

SECRETARY H. L. CONNELL:—Would there be any danger of disastrous results if you should hit a loose plank going over a culvert, or something should hit the tank?

W. D. BURFORD:—We had a case where the reach-rod clashed on the tank. The tank was not put on properly. After it had been on about a month I found a dent in it over ¾" deep. The tank was not impaired in any way.

SECRETARY H. L. CONNELL:—Those are steel tanks?

W. D. BURFORD:—Yes, seamless steel tanks.

SECRETARY H. L. CONNELL:—I have always wondered why the Pierce-Arrow company in particular discarded the position of the gear-shift

Digitized by Google

lever under the steering-wheel. It seems to be a very natural position. Was it because there was not enough leverage? Of course, that would not affect this case, because you have very little work to do.

CHAIRMAN E. T. BIRDSALL:—That was changed simply through the demand of the agents for the side lever. I have used cars with the gear-shift lever under the wheel. The old Darracqs had it there. There never was any trouble at all about leverage. It is a good gear-shift, but you can not sell a car with it on.

AIR PUMPS

E. J. THURBER:—Our experience with air pumps has been quite broad, and we have come to the conclusion that the principal reason that they have not been developed any further than they have is because they have not been made in accordance with the work they are supposed to do. We are able to get as high as 500 pounds without the operation of the pump on the car being perceptible. We designed a pump in which instead of a crank we have a 2″ drop-forged eccentric, case-hardened. We get a perfect bearing, practically indestructible. We also arranged a lubrication system which is practically the same as the splash system on automobiles. The pump proposition has been almost as serious as holding the air after you get it. Our starter today is built with the pump as an integral part, and forms a unit-powerplant. The plant can be attached to a factory proposition similarly to the way the electric starters are attached today, and takes about half as much room.

Another thing about the pumps has been the construction and angle of valve. Judging from the pumps we have inspected, about seventy-five made in this and foreign countries, you would be surprised to see the way people have struggled to hold the air after they got it on top of the cylinder; the different clearances. I believe we use an angle of 26 degrees on the valve, which is the only angle that will hold the air constantly. We find that with 30 degrees you can hold it for about two weeks We find that by case-hardening a valve with a cast iron seat better results are attained. I think the air starter is going to be the thing. I have been in the automobile business about ten years, and our engineer has been in it even since automobiles have been built, and we do not know what to do with the electrical equipment. We have been able to hold air, at 300 pounds pressure, six months just in the valve. If you get a valve with a small check in it, you will have a tremendous amount of heat when running at 800 r.p.m. Our pump has about a 1″ ball-check.

CHAIRMAN E. T. BIRDSALL:—One feature of the pump business that has not been touched on, is the making of a good pump for $5.00.

E. J. THURBER:—I think you will not find a good pump for $5.00.

CHAIRMAN E. T. BIRDSALL:—It is very easy to make a good pump for $25.00, but awfully hard to make one for $5.00.

E. J. THURBER:—I understand that one motor builder is making a seven-cylinder motor, or rather a six-cylinder motor, cast it in threes, with about a four-inch pump between. He is figuring on having plenty of air all the time. He is on the right track.

Digitized by Google

SECRETARY H. L. CONNELL:—I understand with this combination starter and shifter you do not have the trouble with lubrication that one does in getting air pressure for gasoline tanks; that is, it does not make any difference if you do shove oil over; on the contrary, it is an advantage.

E. J. THURBER:—It is an advantage in our system, especially with a gear-shifting device. We used to be troubled with too much oil in the starting system; instead of being now a serious drawback to us, it helps us out materially, because after you once put the starter on, absolutely no instructions as to the lubrication are necessary because it is self-lubricating. On the bottom of our valve there is a trap; the oil goes into that trap from the pump, and the minute you open the valve, it goes into the starter. For tire-inflation we avoid getting the oil into the tires.

SECRETARY H. L. CONNELL:—Has any difficulty arisen from too much oil getting into the air tank; that is, in time making a gummy mass?

E. J. THURBER:—No, in the construction of our valve instead of the air going into the tank direct it is received from the bottom of the valve, in which there is an oil trap of sufficient capacity to take care of as much oil as you would pump in there in a week; the minute you open the top of the valve, the oil that is in there rushes right into the starter. It is for that reason we have absolutely no trouble in cold weather, because any condensation would go in through the trap. There is no occasion for a drainplug in the trap. We have tested repeatedly for water and oil out of the tank, and found absolutely none.

WOOD WHEELS FOR HEAVY VEHICLES

By CLARENCE B. HAYES

(Associate Member of the Society)

The rapid growth in the last few years of the manufacture and use of heavy-duty commercial vehicles has given rise to the establishment of a new branch of the wheel industry, that of the so-called truck wheel. This type of wheel stands quite apart from that designed for the pleasure car, owing to the very different conditions it is called upon to meet, the different demands made on it in service. In the one case we have comparatively light loads, driven at high speed, demanding a light, elastic member capable of quick recovery from road shock, the principal strain being due to side-thrust, the result of skidding, curb impact and similar treatment, not encountered to so great a degree by the slower-moving motor truck. In the other case, we find extremely heavy loads driven at relatively low speed, stability and durability being first considerations.

Digitized by Google

As the advent of the automobile wheel was followed by abandonment of buggy-wheel methods, as unsuited to the needs, with the coming of the truck wheel the wheel-maker was confronted with a new problem and forced to work along different lines to attain the desired result—a correctly designed, well-proportioned product to be relied upon. Although still seizing every opportunity for improvement, he has already met with success, and in the present wood artillery wheel has a type peculiarly fitted to stand up under the severe usage to be expected in its work on a heavy vehicle. The cost is low as compared with steel or malleable iron wheels, while light weight and ability to absorb shock make for longer tire life than in the case of heavier, more rigid metal wheels, which throw the larger portion of the road shocks upon the axle and bearings. The theory has been advanced that the quick radiation of heat by the metal wheel means lower tire temperature with a correspondingly longer life. We are rather skeptical on this point, for the heat is generated at the point of contact of tire and road surface, and it seems likely that most of this heat is transmitted to the surrounding air rather than up through the rubber tire and steel band and thence to the wheel proper.

When the first truck wheels were built some trouble was experienced because of the wheels getting out-of-round and out-of-true, causing more or less attention to be paid to the question of metal wheels, which undoubtedly can be made without much difficulty in this direction. This trouble has now become practically a thing of the past, however, and the present-day wood wheel, made according to modern methods and by specially designed machinery, is not only true and round at the start but remains so.

There are two dominant qualities in the wood wheel that make it stand out prominently—resilient, cushioning resistance against the evil effects of American road conditions, and remarkable ability to withstand the severe climatic conditions here, with extreme temperature change. Wood is not susceptible to temperature change to any extent, the only factor entering being moisture; admittedly wood will deform if allowed to absorb moisture. By the use of bone-dry stock, the pores being filled with lead or oil primer, and several coats of paint being added, ample protection is afforded against change of shape.

Many attempts have been made to design some substitute for the wood wheel that will absorb vibration, the great enemy of longevity of a motor truck. The results to date have been unsatisfactory, most of the substitutes being costly, of prohibitive weight, and having little or no provision for taking up lateral strains, which, as a rule, either cause partial failure of some part, or leave a permanent set which becomes greater with each successive shock. The wood wheel receives the side-thrusts, yields to them gently with a minimum of shock and promptly springs back to its original position after the strain is removed.

Some time ago some tests were made for us at the University of Michigan laboratories on both pleasure car and commercial car wood wheels. A brief summary of the results in one or two typical cases may prove of interest.

Digitized by Google

Size of Wheel	*Spoke Flange*	*Type of Wheel*	*Dishing Load*	*Direct Load*
34 x 3 S	2" x 8⅝"	1-ton front	16,100 lbs.	40,800 lbs.
36 x 4 D	3" x 12"	3-ton rear	30,100 lbs.	114,000 lbs.
40 x 5 D	3½" x 13¾"	5-ton rear	48,300 lbs.	140,000 lbs.

One 36" x 4" dual wheel tested to the limit of the dishing load, and then for direct loading, stood up to 107,000 pounds, or within 94 per cent. of the maximum allowance load. A 36" x 5" dual wheel, tested the same way, stood up to 133,000 pounds, or within 95 per cent. of the maximum. With the 36" x 4" 3-ton rear dual wheel a record was made of the deflection up to 12,000 pounds, then a little more rapidly until the maximum point of 30,100 pounds was reached. Loaded at 23,000 pounds and released, the wheel regained its original position and even from the maximum or breaking point recovered to a remarkable degree, with 1/10" permanent deflection. The wheels had no initial dish, as is provided in the case of pleasure car wheels for added protection against pulling the heart out of the spider. A glance at the tests is sufficient to show that there is little question of the wood wheel being able to stand up under the heavy loading put on it in practice. Failures are very rare, and in practically every case can be traced to either the use of a wheel on a heavier car than that for which it was designed, or the use of brashy timber which under ordinary circumstances would never escape the eyes of the stock grader.

The wheel life would be lengthened materially if more attention were paid to the condition of the tires and they were replaced after having served their time. The old-style truck wheel, intended to serve without a rubber cushion, was assembled with a heavy band of steel ¾" thick. The present truck wheel, to be used with a solid rubber tire, is equipped with a relatively light band, ¼" thick on the smaller single sizes, ⅜" on the larger single and all dual sizes. When the truck owner permits his tires to become worn to a thin ribbon, unable longer to do their work, and forces the wheels to stand treatment for which they were never intended, he is simply throwing away so many years of good wheel-life unnecessarily.

For years the wheel-maker followed individual designs submitted by customers, in a good many cases against his better judgment, but in the past year or so there has been a growing tendency to defer to the opinion of the wheelwright, to leave the design, in part at least, to the man whose experience cannot but prove a valuable asset to the car builder.

The time may come when the wood wheel will be replaced on heavy vehicles by some other type; by some substitute which will either fulfill the required conditions *better* at the *same cost,* or *equally well* at a *lower cost.* For the present, at least, there seems to be a lack of such a substitute.

Digitized by Google

INDIANA SECTION

AUTOGENOUS WELDING

By H. Sidney Smith

Fusion or autogenous welding has during the last few years done more to revolutionize old practice in certain branches of the engineering industry than any other new process. Its introduction has made possible certain forms of construction which had previously been considered impossible or impracticable, and in the repair field has already saved manufacturers and users enormous sums. As generally practiced, it employs the heat generated by electricity or by the burning of a combustible gas with oxygen. For the combustible gas, acetylene, hydrogen or coal gas are most commonly used.

ELECTRIC WELDING

Electric welding may be divided into two classes: resistance and arc welding. The first of these is the process usually employed for welding pipe, chains, and work of like character, in special machines, where only a single joint has to be made and the demand for the article to be welded is sufficiently large to warrant the outlay for the special costly machine. The form of electric welding most commonly employed is the arc process. In this the work to be welded is connected with one pole of a source of current, the other pole being as a rule a carbon rod held in an insulated holder. This holder is manipulated by the operator so as to first make contact with the work and then effect the separation required to maintain the arc. This is a true fusion process and is chiefly employed for filling up blowholes in steel or iron castings. In a modification of this process, which it is claimed gives good results and allows of a more extensive field of operation, a steel rod is used as the positive pole instead of a carbon one. The arc is formed between this rod and the work; when the point of the rod reaches a welding heat it is pressed against the work, some of the molten metal from the rod adheres to the work and is then hammered in by the operator.

Apart from the vital question of cost it is generally conceded that fusion produced by the burning of gases is preferable to the electric process for the following reasons: When welding with the electric arc the intense heat is concentrated on a point, whereas with gas welding the heat of the flame can be brought to bear at will on the work surrounding the part to be welded, making it possible to gradually attain

Digitized by Google

the desired welding heat at any point. With electric arc welding the light produced is so intense that the use of very dark glasses by the operator is imperative. Again, unsteadiness on the part of the workman may cause an arc to be struck between two parts, and fusion or addition of metal where it is not desired. The electric arc is formed at the expense of atmospheric oxygen; this indicates the possibility of chemical changes of an oxidizing character taking place in the molten metal, whereas with the gas process the welded part is always protected from the atmospheric oxygen by a shield of the products of combustion. Electric welding is suitable only for filling in or welding comparatively simple parts and cannot be used for complicated and other work as can the gas process. Probably the chief objection to electric welding is the fact that it is almost impossible to perform any subsequent treatment of the welded part, which is quite simple with the gas process where the area surrounding the weld and the weld itself can be gradually annealed, thus removing internal strains and taking from the welded portion its hard and brittle character. Notwithstanding these drawbacks electric welding has a large field wherein it can be employed advantageously and with better results than can be obtained with other methods of welding.

BLOWPIPE WELDING

Blowpipe welding is a process by which pieces of metal are melted and joined together by means of a flame of sufficiently high temperature, and additional metal of the same composition added if desired. The joint thus obtained is today commonly called an "autogeneous" weld. As a matter of fact the weld obtained by forge welding or by the electrical process can be called autogenous, as use of a metal cement is not necessitated as is the case with a brazed joint. But it is general today to use the term "autogenous weld" only in connection with welds effected by means of a gas blowpipe.

Blowpipe welding on metals of low melting point is a very ancient art and was practiced by the Egyptians. The welding of high-melting-point metals by means of the blowpipe flame was not made possible until oxygen was procurable on a commercial scale. Then welding by means of blowpipes, using oxygen and hydrogen, and oxygen and coal gas began to be developed, but was later more or less ousted from the field by the oxy-acetylene process. More recently the oxy-oil gas and oxy-benz processes of blowpipe welding have been introduced but their fields of operation are not likely to be large for reasons that will be given later. Flame temperatures produced by the combustion of a fuel gas in air or oxygen depend on two factors, the calorific value of the fuel gas and the nature of the products of combustion. Taking the case of a fuel gas with a high calorific value burning to products of low specific heat, we have a flame of high temperature, but if the products of combustion have a high specific heat the flame temperature is lowered proportionately. As an example, suppose we burned sufficient hydrogen to produce a fixed number of heat units, and then burned sufficient carbon

Digitized by Google

to produce a similar number of heat units; in the first case the product of combustion would be water vapor and in the other carbon dioxide (CO_2). Water vapor, however, has a much higher specific heat than CO_2; hence the temperature of the hydrogen flame would be low as compared with the carbon flame or fire, as the flames have to supply the heat to raise the temperature of the products of combustion. With the exception of hydrogen, all fuel gases burnt with oxygen in a blowpipe consist of carbon and hydrogen, and therefore their combustion results in the production of water vapor and carbon dioxide; the less the quantity of water vapor produced, the higher will be the flame temperature. It will, therefore, be appreciated that the gas having the highest percentage of carbon will produce the highest flame temperature. Acetylene (C_2H_2) has a higher specific gravity and calorific value than any of the commonly employed fuel gases; it only contains about 7 per cent. of combined hydrogen and is the nearest possible approach to gaseous carbon. Pintsch, Natural, Coal, Blau, Water, and other fuel gases all contain 2 to 50 per cent. free hydrogen and also more hydrogen in combination. This hydrogen burns to water vapor, which, as before stated, has a high specific heat and will absorb heat and lower the flame temperature.

HYDROGEN WELDING

Hydrogen welding is generally employed only in localities where oxygen is produced electrolytically and the hydrogen is a by-product. When oxygen combines with hydrogen at the nozzle of a blowpipe steam is formed. This steam becomes super-heated in the flame and is finally decomposed. This decomposition or dissociation limits the temperature of the oxy-hydrogen flame to about 4000° F. The decomposition of the steam introduces another serious factor, the presence of free oxygen which oxidizes the metal operated upon. This can be overcome only by using a large excess of hydrogen. Only two volumes of hydrogen are required to one volume of oxygen, to form water, but in actual practice when employing an oxy-hydrogen blowpipe, it is found that four to five volumes of hydrogen are required to one volume of oxygen in order to insure a non-oxidizing flame. This in itself will cause the process to be wasteful, as the heat is limited to the amount obtained by combining two volumes of hydrogen with one volume of oxygen. Practice has shown that oxy-hydrogen welding is suitable for thin sheet work only. The temperature of the flame is not sufficiently high to permit the welding of thick plates or castings, since the flame has to be applied for so long a period that before the necessary fusion point is reached the metal being operated upon is ruined. For thin-sheet welding the process has certain advantages. The flame is a diffused one and consequently less liable to melt through or pierce the metal, as sometimes occurs when employing the oxy-acetylene flame on thin work; and it is probable that a better-looking and finished job can be made with the oxy-hydrogen flame on thin sheets up to 1/16th thick than by any

Digitized by Google

other process of welding. But the quality of the weld is uncertain and the process is more or less wasteful.

OXY-COAL OR CITY GAS FOR WELDING

Owing to the impurities present the oxy-coal or city gas process cannot be employed on work where the strength of the weld is an important factor. The flame temperature is considerably lower than that of the oxy-hydrogen flame; consequently the process can be employed only on very thin iron or steel sheets or on metals having very low melting points.

OXY-ACETYLENE WELDING

Oxy-acetylene welding was first practiced about thirteen years ago. Previous to that time it had been fully appreciated that wonderful results would be obtained from using oxygen and acetylene in a blowpipe, but it had been found impossible to construct a blowpipe that would consume acetylene at low pressure. Acetylene under pressure then came on the market and the blowpipe difficulty was soon overcome. At a later date, injector blowpipes were produced which permitted a low-pressure acetylene being employed. Experience has proved that the best results are obtained when acetylene is delivered at the burner tip under considerable pressure. Today it is usual to obtain acetylene from a pressure generator or from a cylinder of dissolved acetylene, with any type of blowpipe, or to use an injector-type blowpipe drawing the acetylene from a low-pressure apparatus with excess of pressure on the oxygen supply to provide power to suck in the acetylene and deliver the mixture of gas to the blowpipe nozzle at a suitable pressure. However, there is no doubt whatever that in order to obtain economy and really satisfactory working, both gases should be delivered to the blowpipe under pressure. One volume of acetylene (C_2H_2) requires theoretically 2½ volumes of oxygen to burn it completely to its products of combustion, which are carbon dioxide and steam; but in actual practice it is found that 1.1 or 1.5 volumes of oxygen only have to be supplied to the blowpipe to 1 volume of acetylene, depending upon the nature of the acetylene supply and the blowpipe employed. All of you have probably seen an oxy-acetylene blowpipe in operation and know the appearance of the flame, which consists of a small white jet at the nozzle of the blowpipe, surrounded by a blue flame. Acetylene is an endothermic gas and immediately on issuing from the nozzle of the blowpipe dissociates or splits up into its two constituents, carbon and hydrogen. The carbon burns with the oxygen supplied through the blowpipe to form CO, producing the white flame at the nozzle. In order to form CO, equal volumes of acetylene and oxygen are required, but then another phase of combustion takes place; the CO burns to CO_2 and the hydrogen later combines with oxygen to form steam. If a blowpipe could supply an absolutely perfect mixture of equal volumes of acetylene and oxygen at its nozzle, the remainder of the oxygen required to burn the CO to CO_2, and the hydrogen to steam, could be extracted from the air. This has not yet been quite

Digitized by Google

attained and in practice some of the oxygen required to burn the CO to CO_2, has to be supplied through the blowpipe, although as stated above, the best blowpipes produced today require only 1.1 volumes of oxygen to one volume of acetylene. It should be understood that the hydrogen combines with the oxygen of the atmosphere only after it has passed away from the high temperature zone of the white welding flame, the temperature of which is about 6000° F., at which figure it is impossible for steam to exist, as it is far beyond its dissociation temperature. The result is that the molten metal is surrounded by free hydrogen, tending to prevent oxidation, the hydrogen also protecting the inner, or welding, flame from loss of heat.

OXY-ACETYLENE WELDING EQUIPMENT

There are today in the field two styles of welding outfits, commonly known as the high- and low-pressure systems. With the low-pressure system the acetylene is supplied from an acetylene generator which delivers gas to the blowpipe at a pressure of two or three ounces, and the oxygen is supplied under pressure in an ordinary trade cylinder. The low pressure of the acetylene supply necessitates the employment of pipes of the true injector type, in which excess pressure has to be used on the oxygen supply in order to suck in sufficient acetylene and deliver the mixture of gases at the blowpipe nozzles at a proper pressure. With this method it is more or less impossible to get perfect mixtures of the gases, and the oxygen consumption is undoubtedly higher than when both gases are supplied under pressure. A certain unsteadiness of the flame also has to be contended with. Notwithstanding its drawbacks the low-pressure generator system has one important point in its favor as compared with the high-pressure generator system, namely, that the insurance companies look upon it with much less disfavor.

The high-pressure system of oxy-acetylene welding may be sub-divided into two classes: first, the plants in which the acetylene supply is obtained from a generator which delivers and generates the acetylene gas under pressure; second, those plants which employ cylinders of dissolved acetylene instead of the high-pressure generator. With both these styles of plants, any type of blowpipe can be employed, and, as both gases can be delivered to the blowpipe under pressure, a nearly perfect mixture of gas can be delivered to the blowpipe nozzle, which is not the case when the oxygen only is delivered to the blowpipe under pressure, as in the low-pressure system. High-pressure acetylene generators are looked upon with disfavor by all insurance companies, and in some cities their use is prohibited by the authorities on account of the many accidents which have occurred through their employment. They are, as a rule, designed to deliver the gas at a pressure not exceeding 15 lbs. to the square inch. Under this pressure acetylene, if it has no air mixed with it, is not explosive, but at times the class of generators under consideration get out of order, excess pressure frequently being the result. At 30 lbs. pressure acetylene is explosive, and between 15 and 30 lbs. its action is somewhat uncertain.

Digitized by Google

Where dissolved acetylene is employed instead of a high-pressure generator, immunity in respect to accident due to excess pressure is obtained, due to the fact that the acetylene while under pressure is stored in a porous mass contained in the cylinders, which makes it quite impossible to propagate an explosion through it. Acetylene, when delivered from the generators always contains a small percentage of impurities which are, as a rule, ammonia, sulphuretted and phosphoretted hydrogen. These can be eliminated from the gas if proper purifying apparatus is installed with the plant, but this is very seldom done, with the result that the gas delivered from the high-pressure generators always contain a small percentage of the impurities mentioned above. Any one familiar with the working of iron and steel will appreciate fully what will occur if molten iron or steel is brought into contact with the gas containing phosphoretted and sulphuretted hydrogen. When dissolved acetylene, however, is used, instead of a generator, this possibility is overcome, due to the fact that manufacturers of dissolved acetylene always wash, dry and purify their gas before compressing it into cylinders.

Many tests have been made to find what effect the presence of phosphoretted and sulphuretted hydrogen has on a weld. A number of gasoline and gas containers were welded, some with unpurified gas drawn from an acetylene generator, and others with gas drawn from a cylinder of dissolved acetylene. All the welded vessels were tested under pressure, and it was always found that those welded with the unpurified gas did not survive as well under the test as did the others. It may also be noted that when impure acetylene is used the welding flame is colored and much more difficult to regulate.

Users of acetylene generators are apt at times to overload them, with the result that there is undue heating. This heating may cause polymerization, or breaking up, of the acetylene itself. The presence of this altered gas in the pure acetylene will cause changes in the welding flame which affect very seriously the work and necessitate the use of more oxygen than if the acetylene were in a pure state. A cylinder of oxygen and a cylinder of acetylene can be moved readily on a truck to any position in a shop desired, whereas an acetylene generator should be stationary, although there are today on the market various acetylene generators which are stated to be portable. These, however, are not really suitable for welding work, as they are too small to generate gas fast enough to feed the blowpipes without undue heating, which, as mentioned above, is not only dangerous but deleterious to the acetylene itself.

OXYGEN

Very few users of the oxy-acetylene process manufacture their own oxygen, but purchase it from the large oxygen manufacturers. For commercial purposes oxygen is manufactured by either the liquid air or the electrolytic process and can be obtained in a state of comparative purity from either class of plant. Any impurity contained in oxygen manu-

Digitized by Google

factured by the liquid air process is mainly nitrogen, and while freedom from nitrogen is desirable a slight percentage is not fatal to good welding of iron and steel. However, should the percentage of impurities exceed 1½ per cent., the welds will be somewhat porous, due to the absorption of the nitrogen by the molten metal. The purest possible oxygen should, however, be procured for welding aluminum, copper and brass, as at high temperature these metals have a strong affinity for nitrogen. Any impurity in oxygen made by the electrolytic process will be hydrogen; excess quantities will reduce the flame temperature and of course necessitate the use of more oxygen in the blowpipe. Electrolytic oxygen, however, is generally supplied in a comparatively pure state.

STRENGTH OF WELD

The strength of a weld produced by the oxy-acetylene flame is, as a rule, less than that of the original metal unless certain precautions are observed. This can easily be accounted for. It is rarely possible to obtain for filling-in purpose rods of similar material to that being operated on. It is common practice to use rods of high-grade Norway iron for filling-in. This permits of a sound, soft, homogeneous joint being made, but Norway iron has a low tensile strength as compared with the irons and steels of commerce that have to be operated on. This naturally weakens the weld as regards tensile strength. Tests have been given out from time to time which tended to show that steel plates up to ⅝″ in thickness could be autogenously welded and that the weld was stronger than the original plate. This is impossible unless the material used for filling-in be of higher grade than the plate itself. A claim of 100 per cent. weld strength is unsupportable. Practice has shown that with thin steel sheets, say, ⅛″ thick, one can get a weld strength of 95 per cent., and that this figure falls to 85 per cent. for 1″ thick plates. However, in most cases where welding has to be carried out there is no objection to adding a fillet of metal along the joint or using special high-tensile-strength steel for filling-in, when the welded portion can be made to equal or exceed the strength of the rest of the work.

SKILL NECESSARY

Satisfactory results will never be obtained unless skilled workmen are employed to operate the blowpipes. It does not take very long for an intelligent workman to become a fair welder on straight-ahead work on steel plates and similar classes of work which does not exceed ⅜″ in thickness. To weld metals under ⅛″ thick requires considerable skill, which practice alone can produce. It takes considerable time for a beginner to attain the necessary steadiness of hand to make a neat weld and avoid piercing the plates. On this class of work buckling difficulties also have to be contended with, but experience soon shows how to overcome them.

To weld work over ⅜″ thick takes very considerable skill, and honesty on the part of the operator is indispensable. It is impossible to judge the quality of a weld by merely examining the work after

Digitized by Google

completion—it may have a good appearance and yet be poor work; that is to say, if the plate were fractured at the weld it might be found that the proper fusion had not taken place right through the section and a proper homogeneous mass produced. The skill necessary to undertake this class of work should be attained after a few weeks' practice. Men employed on it should never be hurried; otherwise poor work will result. Piece-work should never be considered under any circumstance. Welding on thick plates is as a rule connected with work of importance; a faulty weld may have serious results; consequently unless the workman can be trusted, careful watching during the welding process is essential, as that is the only time when the bad work can be detected. Anyone watching the welding process for the first time comes to the conclusion that the operation is very simple and that any workman can operate the blowpipe with little or no practice. This has been a somewhat serious handicap to the industry, as enthusiasts after seeing the process have purchased an equipment and then without any preliminary practice attempted to use it on work of some importance; of course, failure has been the result in most cases and the blame been laid not to the operator but to the process. Oxy-acetylene welding must be considered a trade; a skilled welder is just as much of an artisan as the ordinary blacksmith. This has been appreciated fully in Europe, where welding schools are located at all important centers, and men are thoroughly instructed in the process; after leaving the schools they are placed out on probation in shops where the process is in general use; if, after a period, they have attained the necessary skill, they are granted a certificate. Manufacturers will rarely employ a man for welding work who does not hold a certificate from one of the schools.

PREPARATION OF WORK

One of the chief points to be borne in mind, if oxy-acetylene welding is to be carried out successfully, is that very careful preparation of the work is necessary. The parts to be welded must be free from rust and grease. When making butt or end-to-end welds on plates, it should be certain that the work is cut true. Plates over ⅛″ thick must, when a butt joint is desired, be beveled and the opening across the top of the *V* should at least equal the thickness of the plate, so as to make possible the metal being welded throughout the entire thickness of the plate. Plates over ¾″ thick should be beveled if possible on both sides; also welded from both sides. Many workmen will try to weld plates up to ⅜″ thick without beveling, but a poor joint is invariably the result, mainly due to burning of the metal, caused by too lengthy application of the blowpipe flame. The welding together of plates of different thickness is somewhat difficult, but not by any means impossible; in most cases where this has to be done some special manipulation can be devised to make the job practical.

SPEED

The following table shows the speed at which the welding of steel

Digitized by Google

and iron plates can be carried out; also the necessary acetylene gas consumption:

Thickness of Metal	*Feet Run Per Hr.*	*Acetylene Per Hr.*
In.	Ft.	Cu. Ft.
1/32	30	3.25
1/16	25	5.00
3/32	20	8.25
1/8	15	12.00
3/16	9	18.00
1/4	6	25.00
3/8	4	42.00
1/2	3	60.00

The oxygen consumption will be 1.1 to 1.5 times the acetylene consumption, depending on the quality of the blowpipe employed. As would be expected for metal over ⅜" thick, the gas consumption per foot run of work increases rapidly, and the speed at which the work can be done falls. This leads one to conclude that for constructional work ⅜" metal is about the thickest that should be worked, except in cases where older methods, such as riveting, are impossible. For repair work the case is altogether different; metal of any thickness can be worked, and in almost all cases the repairs effected will be made more quickly, better and more economically than by old methods.

RELIEVING INTERNAL STRAINS

In every case of welding internal strains are inevitably set up, due to the metal expanding when heated and contracting when cooling. When the parts welded form part of a structure and are restrained during the welding process, the strains produced may cause cracking of the metal, especially in the case of cast iron; and the tendency to crack will be greatly increased if the cooling of the metal, after fusion, is rapid or irregular. Whenever local strains exceed the strength of the metal, a fracture must occur. In order to relieve welded metal from internal strains due to welding, it is desirable to preheat the whole work (before welding) and also to reheat it after the welding is completed. In the case of cast iron in a restrained part of a structure this treatment is imperative; the heating should be carried on slowly and the work kept free from air-drafts. This treatment is less essential for steel but can never be anything but beneficial.

WELDING CAST IRON

To one not acquainted with the process, the welding of cast iron appears to be more difficult to accomplish than work in steel or wrought iron, but such is not the case. Carbon exists in cast iron, in different states; in what is called white iron, which is very hard, the carbon is combined with or dissolved in the iron, but in gray iron, which is soft and easy to work, most of the carbon is in a free state in the form of graphite. Since it is generally necessary to work a weld in cast iron, it is indis-

Digitized by Google

pensable that the line of welding be constituted of gray iron. The obtaining of welds of gray iron depends on the state of the carbon in the metal. Rapid cooling tends to bring about the combination of the carbon and iron, that is to say, the formation of white iron. Slow cooling or reheating after the welding is completed tends to bring about the precipitation of the carbon and the production of a softer material. It is found that by employing silicon in the filling-rod in the form of ferrosilicon, the iron combines with the silicon in preference to the carbon and allows the carbon to take the form of graphite and thus facilitate the formation of gray iron. The presence of manganese has exactly the opposite effect. It will be seen that in order to get good workable welds there must be slow cooling after the welding is completed. The filling-rod must contain a percentage of silicon, and there must be no manganese present.

The welding point of ordinary cast iron is lower than that of iron or mild steel and lower than the melting point of iron oxide; therefore, if any oxides are formed during the welding process they cannot be melted and blown away by the flame as is the case where iron or steel is fused, when this can be done due to the fact that the melting point of the steel is higher than that of the oxide. It will, therefore, be seen that when welding cast iron it is necessary to employ some flux to break down any oxides formed. When working on thick cast iron the parts to be joined should be beveled as for steel.

Cast iron is a comparatively poor heat conductor, and has no elasticity or elongation before rupture. It is, therefore, necessary to appreciate that when welding it expansion and contraction may bring about breaks if the parts oppose free play of the metal and special precaution must be taken to prevent this. When the size of the piece to be welded allows complete preheating of the whole, and slow cooling, breaks or cracks are not to be feared; but with large castings where total preheating is impossible the welder must exercise thought as to how he can overcome the effects of expansion and contraction by heating other parts of the piece away from the weld.

MALLEABLE IRON

The welding of malleable iron is a somewhat difficult and uncertain operation. Malleable castings are supposed to be of the same texture throughout, but in some cases consist of a core of cast iron surrounded by a layer of iron. It will be appreciated that between the surface of the casting which is nearly free from carbon and the core which is cast iron, there exists a more or less carbonized zone. In some cases where castings have thin parts which are properly decarbonized and the fracture is in the thin part, the welding can be carried out just the same as in mild steel. In the thick part of a casting, however, it is different, as the metals of the core and the surface are not the same and require altogether different treatment.

ALUMINUM

The welding of aluminum by the oxy-acetylene process provides an

Digitized by Google

enormous field. Those attempting the work for the first time are apt to be discouraged by their failure, which is common until a few little points have been mastered. The melting point of pure aluminum is about 650° C. and the metal is very fragile in the near neighborhood of this temperature. It is the low melting point combined with high conductivity and specific heat that makes welding difficult for the beginner. The high melting point of the oxide (alumina) as compared with that of the metal itself has to be contended with also. To insure good welds the work must be absolutely clean. To remove all traces of oil from an old aluminum casting takes considerable time; this is best done by heating slowly over a charcoal fire and carefully wiping the oil away as it exudes from the metal. The welding or filling-rod employed on pure aluminum, must also be quite pure, as the introduction of foreign elements may bring about disintegration along the line of welds. The low melting point of the metal necessitates skilful manipulation of the blowpipe, although a hot and fairly large flame is necessary on account of the high conductivity. The oxide formed during fusion does not necessarily rise to the surface as it is denser than the metal; it is therefore essential to use a proper flux. It might seem that deformation of castings due to expansion would be difficult to overcome, but such is not the case in practice as the high conductivity of the metal tends to distribute the heat over the whole mass. When preheating a casting before welding, care should be taken not to raise the temperature to over 500° C.; otherwise it may deform under its own weight. The welding of aluminum alloys, particularly aluminum zinc, is more important than the welding of the pure metal, as most castings are made of this alloy. The percentage of zinc varies as a rule from 10 to 30 per cent.; and copper is generally present in small quantities. It is impossible to know the composition of all aluminum alloy castings that come along for repairs; therefore it is necessary to use a filling material that will be generally serviceable. Rods made up of 88 per cent. aluminum, 10 per cent. zinc, 2 per cent. copper, give good results. Aluminum alloys are not very ductile; hence trouble from expansion and contraction must be guarded against. Some castings have ribs which tend to produce cracks during cooling and in some cases it may be necessary to cut the ribs to allow for the necessary expansion and contraction. These can easily be welded up later.

COPPER

Until quite recently the successful welding of copper was considered impossible, but this was due to the fact that welders were ignorant of the disturbing factors which contributed to poor results and took no steps to counteract them. It is easy to make a joint that has the appearance of a good weld but a full knowledge of the nature of the metal and how it should be treated is required before welds can be made that not merely look good but prove under test to be as strong and malleable as any high-grade copper. To obtain good results special filling-in rods must be used; the best results are obtained with phosphor-copper rods which are

Digitized by Google

specially manufactured for welding work. It must not be thought that any phosphor-copper is suitable; the amount of phosphorus must be just enough to do the work required of it and no more. A good flux to employ when welding copper consists of a mixture of salt, borax and boric acid, but should be used sparingly. After welding the work should be reheated and hammered along the weld, again reheated and if possible plunged in water. Copper when heated radiates its heat very rapidly and as it is also an exceptionally good conductor of heat it is found that the heat of the blowpipe alone when dealing with large masses of copper is not sufficient to keep up the fusion; therefore additional heat supply should be provided and as much of the work as possible covered with asbestos to prevent radiation. The employment of phosphor-copper as a filling-rod prevents the formation of copper oxide, which in excessive quantities renders a weld extremely fragile and weak, although a small quantity of this oxide is not detrimental and is considered by some to improve the quality of the metal. Molten copper will dissolve hydrogen and carbon monoxide in considerable quantities and when the metal solidifies the gases are evolved. This causes a frothing of the metal during solidification, the resulting metal being spongy. Unfortunately the gases present in the blowpipe flame are those on which copper exerts its solvent property, but the use of phosphor-copper prevents this, the phosphorus either suppressing their solution or aiding their evolution before the metal solidifies. Copper has a high coefficient of expansion; the consequence is that in cooling considerable stresses may be set up due to contraction, and as copper has very low tensile strength these unless counteracted may cause fractures; but precaution can be taken to prevent this and as a rule the contraction stresses can be nullified by opposing them by means of local heating applied to certain parts, dependent on the shape of the article, or by proceeding with the welding on a certain plan.

BRASS

The welding of brass is quite simple although it would appear at first sight that evaporation of the zinc would be detrimental. This difficulty is overcome by the employment of special welding rods containing a small percentage of aluminum. A good flux to employ when welding brass consists of a mixture of sodium-chloride, borax, and boracic acid. Hammering of brass after welding considerably improves the metal. It should be done cold on brass with a high percentage of copper, and hot on brass with a low percentage of copper. After cold hammering the brass should be annealed.

BRONZE

The welding of bronze requires that the welding flame be quite neutral. Special welding rods have to be used, containing a percentage of phosphorus in proportion to the nature of the bronze. A similar flux to that employed in brass may be used. Annealing after welding is essential. Tempering may also be resorted to if desired.

Digitized by Google

METAL CUTTING

It is probably not out of place to refer to the development of metal-cutting by means of oxygen. The blowpipe used for cutting metals by oxygen generally consists of an oxy-acetylene blowpipe fitted with a central or following jet for oxygen only The work that has to be cut is first of all heated up by means of the oxy-acetylene jet, and, as soon as it is raised to a temperature at which oxygen will ignite it, the separate oxygen jet is turned on, and the metal at once burns away very rapidly. The oxygen supply has sufficient pressure behind it to blow away the oxide as it is formed, with the result that a clean narrow cut can be made through plates up to 12″ in thickness and over. The speed at which this work can be done is high, varying from 100′ per hour for metal ¼″ thick to 12′ per hour for metal 12″ thick; the oxygen consumed in this process varying from 0.50 cu. ft. per foot run in ¼″ plates to 50 cu. ft. in 12″ plates. The users of the oxy-acetylene welding process find it most advantageous to have oxygen-cutting blowpipes in conjunction with their plants. They are found most useful in preparing work which has to be autogenously welded, more particularly in opening out cracks.

MISCELLANEOUS APPLICATION

It will be appreciated that the applications of autogenous welding are innumerable when it is considered that it is possible to weld practically almost any commercial metal without in any way seriously altering its nature, and to add at will any metal to any piece of work. The following are some of the applications to which the process is put today:

Repairs to all classes of boilers in place, such as building up wasted landings and corroded parts, repairing cracks in flues and patching same. Repairing cracked or broken castings of any metal. Making good castings that come from the sand with blow- or sand-holes.

It replaces brazing on cycle frames, forks, and wheel rims. The manufacture of small steel boats; substituting riveting.

Manufacture of safes.

Castings impossible to mold can be made in parts and united.

Artistic ironwork.

Railway steel car construction and repairs.

Building up parts worn by friction.

Pipe jointing.

Repairs to locomotive frames, cylinders, boilers, etc.

Manufacture of steel barrels.

Manufacture of air and gas containers.

Filling up holes drilled in error.

IN THE AUTOMOBILE FIELD

In the automobile field the savings that can be effected by the process are enormous. This industry provides welding with an unique field. The process already has a firm footing in most shops and is generally employed for repairing cracked cylinders, gear-cases, building up teeth

Digitized by Google

on gears, repairing and reinforcing broken frames, constructing exhaust manifolds, etc. As the process becomes more developed there is no doubt that it will be employed in the construction of motor cylinders built up from sheet iron parts welded together, especially in the case of aeroplane engines where light weight is an essential feature. It is also probable that this form of construction will eventually replace castings for gear-cases, housings, etc.

The oxy-acetylene flame is now employed extensively for hardening the wearing surfaces of steel parts; it is applicable to such purposes as the hardening of the surfaces of gear teeth, template holes and in general to the local hardening of any small area upon a large piece, especially where case-hardening might cause distortion which it would be difficult to remove by grinding. The feature of the process is the quick transit of an intensely hot flame over the surface to be treated, so that it is raised in one continuous wave to hardening heat, and then as rapidly cooled as soon as the flame has passed, by the coolness of the remaining metal, leaving the surface at the maximum hardness the composition of the steel will allow. The hardening will be found to penetrate to a depth of about 1-16".

In the tool room the process is found of great service, especially in the construction and alteration of jigs, and economy in the use of high-speed steel can be effected by welding short pieces to lengths of inferior steel.

DISCUSSION

W. G. Wall:—I would like to ask what relation in welding steel the amount of carbon in the steel bears to the weld; in other words, whether in the case of high-carbon steel it is possible to leave the same amount of carbon in the weld as is contained in the two pieces being welded?

H. Sidney Smith:—This can be effected by using special material for filling in. It is possible today to procure from firms who make a specialty of these materials filling-in metals which contain any desired quantity of carbon. When steel is welded by the oxy-acetylene process there is as a rule a slight loss in the percentage of carbon in the welded joint, but this can be overcome by using a special filling-rod.

Chairman Combs:—In other words, you would have to get a filling-rod of higher carbon than the steel to be welded, in order to have the net result the same amount of carbon in the weld as in the steel welded.

H. Sidney Smith:—With oxy-acetylene it is possible to have a carbonizing or oxidizing flame. It is, therefore, possible by using excess acetylene to add carbon to the metal operated upon.

Secretary Grimes:—Can you weld a high-copper brass to a low-copper brass?

H. Sidney Smith:—Yes, provided a proper filling-in material is employed.

F. E. Moskovics:—Have you had any experience in the practice of

Digitized by Google

adding sheet metal in cylinder work? I saw a motor of which practically the entire cylinder construction was sheet metal autogenously welded.

H. SIDNEY SMITH:—I have had no actual experience in that myself but I have seen such welding carried on in Paris. There that construction of aeroplane motors is quite common.

THE TENDENCIES IN BODY DESIGN

BY HINSDALE SMITH

(Member of the Society)

Body design is a matter of both utility and appearance. I believe that the present tendencies are toward the greatest efficiency and that the automobile body of the future will be evolved along this line. In seating arrangements we have observed a tendency toward the Sedan style in touring cars, using one very wide door on each side in the rear of the front seats, the front seats having a passageway between them or one of them being made to fold up to the side of the body. This is a practical arrangement and in the case of five-passenger cars a very useful design. The doors should be at least 25" wide. The body should be made for somewhat less money than when four doors are employed. In small bodies particularly, with the four-door arrangement the doors have to be made too narrow where a deep cowl is employed. With the two-door body the cowl may be made very deep, giving plenty of room for a large gasoline tank where this is desired. The door is also placed forward of the rear fenders, making it much easier to enter when the top is raised. The same idea might be carried out with seven-passenger bodies, but I believe its usefulness is confined to the smaller type.

There are numerous instances of bodies having a tire-compartment in the rear; the tires being placed in the body by removing a panel in the back of the rear seat, in which case the tire is carried in a vertical position In several recent foreign designs the tires are carried horizontally on the floor of the car, lying under the rear seat, occupying the lower portion of the extended back end of the body. In these cases the rear end of the body is of the streamline form. On cars having the gasoline tank at the rear it is not easy to conceal the tires in the back of the body. The use of the dash tank where it can be arranged to be of sufficient capacity is of value in this connection.

There is an increasing tendency abroad to devise some means of concealing the top in the body when it is not in use. Numerous new designs are appearing and the development should be watched with considerable interest. Those I have so far inspected are rather crude when the top is in use, there being a very unsightly opening left at the back of the rear seat. Several designs have appeared recently in which the body is fitted

Digitized by Google

with removable lids which are opened when the top is being raised and closed when it is up. These are fairly successful on narrow bodies but not satisfactory on bodies having room for three on the rear seat.

It is a matter of common knowledge that nearly all new body styles originate in Europe. Why this should be can be understood clearly when it is considered that a customer there wishing a new car buys the chassis separately, which he takes to the body builder who builds specially to individual requirements. In this way there is an endless chance for experiment; each body incorporating new ideas and improvements. A single body builder has the opportunity of building hundreds of new designs in a year, whereas in this country a manufacturer builds thousands of only two or three designs. For this reason it is most necessary to watch the bodywork being done abroad. Many new designs appearing crude to us at present will in the course of a year or so be perfected and modified to give pleasing and practical results. It must be borne in mind that not all designs which look well on foreign chassis appear equally well on ours, as the foreign chassis are built lower and have better body space. In the past the American engineer has been prone to skimp the space behind the dashboard in order that his engine be not crowded, forgetting that he is building a carriage to transport people over the highways rather than an interesting piece of mechanism.

I believe that within a season or two a practical design for folding the top into the body will appear; the top being entirely out of sight when down. The design should be so worked out that there will be no necessity for removing any straps or slip cover. It should also permit of the top being much more quickly brought into place; with the present arrangements it takes several minutes to uncover and unstrap the top.

While not strictly connected with body design, there is a very marked tendency abroad to increase the height of the hood, due undoubtedly to the use of long-stroke engines. The hoods have a circular-shaped top, getting away from the old Mercedes type; being also much wider at the rear, making it very easy to design a streamline body merging very gradually and in some cases imperceptibly into the hood. The new radiators are also rounded off so that all angularity is obliterated. The top edges of the body, instead of being straight and finished with a bead, are rounded over, the upholstering coming flush with the top edge and not being overstuffed. This makes a very pleasing appearance, very much in keeping with the streamline design. The tendency is to get rid of all angles and round all corners, giving the whole car as much of the stream line as possible. This is a logical development and will eventually be the generally accepted design. The tires, top and all other accessories will also be covered within the body. This will not be accomplished in one season but be a gradual development.

My remarks apply not only to touring cars but largely to limousines, as to which there is at present a divergence of opinion as to what is really the best type. The streamline type of body originated in Germany and was not taken up widely in France until recently. The rounded type of

Digitized by Google

limousine is an outgrowth of the streamline touring body. The use of the rounded-roof type of limousine has grown considerably within the last year. It is popular over a large part of this country, but we find that New York city patrons prefer the flat or old-style roof dipping at the front toward the dashboard. This is undoubtedly due to the fact that so many French bodies are used in New York, the French designers not having adopted the German style. To take up the more specific points in limousine design, there are very few of the double-compartment type now being made. Frameless glass is used universally. There is a strong tendency to use more hard wood in the interior trimming. Very little broad lace is used in the trimming. There is a tendency to conceal the toilette cases by some makers, but this is a doubtful improvement.

There is undoubtedly a growing demand for closed cars. The public has accepted the automobile as a permanent institution and the owner of a car is not now satisfied to put his machine away for the winter but expects to use it throughout the year. Naturally the man who drives his own car is as desirous of protection as those who ride in limousines. It is for this class of owner that the convertible body has been developed. Strange as it may seem, 90 per cent. of the purchasers of this type of body owned limousine cars; having been used to the comfort of closed bodies they desire the same protection when touring on cold nights or rainy days. I believe that eventually all touring cars will be supplied with some form of convertible body. The owner will then be equipped for all-the-year use of his car and can adapt it to the weather or his various moods.

To sum up, the present tendencies in body design are toward the streamline type, hood and cowl merging into the body, rear extended to enclose top and extra tires and an outline to minimize wind resistance, all edges rounded off, five-passenger bodies with two doors only, and convertible top to give complete glass protection when needed. The enlarged cowl will provide plenty of room for the gasoline tank, convex fenders and probably all lamps set in and made flush with the guards, radiators or body. The headlights will be provided with dimmers or extra bulbs of small power. The whole tendency of logical design is to smooth off the body in every way possible, removing all projections, greatly facilitating cleaning, which is really a great advantage. The owner of the future will demand a car that will be comfortable to ride in at all seasons, that can be changed from open to closed with the minimum of time and trouble and in which all accessories and spare parts will be covered and protected and easily kept clean.

Bodies will look odd to us as we experience the evolution; first, the concealment of the extra tires, then perhaps the elimination of the usual folded top, then non-projecting lamps, etc. Finally we will wonder why we formerly covered a car with so many trappings.

Digitized by Google

METROPOLITAN SECTION

GLARE-PREVENTING DEVICES FOR HEADLIGHTS

CHAIRMAN JOSEPH A. ANGLADA:—Gentlemen, the object of this meeting is to discuss the theory and operation of glare-preventing devices for headlights and to show the devices in operation. As you know, it will be unfair to draw conclusions relative to the comparative efficiency of the devices, because we have not laboratory or road conditions here in the meeting room. The various lights have lamps of different candlepower as well as of different construction. If we wanted to draw scientific comparisons, laboratory apparatus would, of course, be necessary.

WARD LEATHERS:—In our original experiment a small disk was placed in front of the filament to cut off a portion of the light and reflect it back into a large parabolic reflector and thereby scatter the rays, getting some of them on the road; a sprayed light rather than a direct one. Unfortunately enough of the rays got into the large reflector to throw a direct ray forward into pedestrians' eyes. A little glare could always be discerned.

A device is now being developed that can be placed in a lamp and be controlled from the seat. It has been borne in mind all the time that it is necessary not only to eliminate the glare but keep the light on the road, because the source of light is very small. With only 12 to 24 candlepower in the headlight it is absolutely necessary that the rays be very intelligently directed if you want to get any light on the road. An attempt was made to merely shelter them by means of a more or less spherical disk of aluminum or celluloid snapped over the bulb. This device worked successfully in that it eliminated the glare, but it did not give enough light on the road. A new method of procedure was then tried. It was believed possible to get the light on the road by means of a piece of glass of the right prism, and considerable time and money were spent in developing this scheme. This also was found to be theoretically accurate and reasonably practicable, but to make the lenses so they would actually do the work, cost about $50 per lens. They have to be practically perfect devices to do the work. The rays can be deflected to any desired angle and positively spread over the road without causing any glare.

Digitized by Google

It was decided that the rays could be thrown forward by means of a little lamp through a large reflector, thereby partly keeping them on the road and not in the pedestrian's eyes. This worked very well but required a large source of light to get the light on the road.

A curve was carefully plotted which would catch the rays from the filament and throw them approximately parallel, and then set at a sufficient angle to get the topmost rays below the pedestrian's eyes 6 or 8 feet in front of the car. When the reflector catches the rays from an ordinary bulb it will throw them forward parallel and operates at any angle desired. Several angles were tried and 15 degrees was found very satisfactory. But the few stray rays that get into the edges of the big reflector caused just as much glare, apparently, as if they all got in. So the problem was only half solved.

A very sensible solution was finally found. In addition to a sectional reflector back of the bulb for the purpose of catching the rays and throwing them forward, a straight apron for the purpose of eliminating any possible rays that might sneak into the big reflector was used. This little supplementary reflector is adapted to attachment to any Ediswan socket and is secured by means of a focusing device.

J. F. Middleton:—We all know that in riding at night we want to see as far ahead as possible. We do not want to put our light out, we do not want to dim it, we do not want to screen it; we want all the light we can get and far enough ahead to make it available for speedy riding. The thing to do is to get at the root of the matter. I had that in mind in splitting the reflector in two, horizontally, distorting the glaring rays that meet the eye, but still throwing enough light ahead on the road. You can see all around you and see where the other fellow is going, and still have light ahead. By touching a button on the steering-wheel, or any other convenient place, the glare is broken. By touching the button again after you have passed your neighbor you have the light projected ahead again. The device is very simple (hinged top and bottom) and can be worked by a solenoid or any electromagnet.

Norman Macbeth—A great many of the headlight difficulties we have had in the past have been due to the light sources used. In the case of electric incandescent bulbs the filament construction and form were of such a character that it was impossible to design reflectors that would properly direct the light. Glare has been defined as misplaced light. Blinding and glare effects from automobile headlamps are due entirely to improperly designed reflectors and unsatisfactory combinations of lamp and reflector. The solution lies in proper control of light, in the use of reflectors of exact design having a finish which may be maintained throughout a reasonable life.

I believe that in themselves the electric incandescent bulbs used are not the cause of glare. While they are bright, the filament is so condensed that it is effective on a very small spot in the retina of the eye. Even the most casual examination of a number of concentrated filament mazda bulbs, ranging from 6 to 30 candlepower, will bring out this

Digitized by Google

point most forcefully. On lighting them you will find that the eye can judge area only and not intensity or brightness, and that to the eye there will be little apparent difference between even 6 and 30 candlepower bulbs. A reflector, however, enlarges the small filament spot to several hundred times its actual size. Directing the reflector so that it fills the retina, you are bound to get a blinding effect due to the enormous stimulation of the proportionately large affected parts of the retina.

Headlight tests and legislation in railroad work offer many suggestions to the automobile engineer. The law affecting railroads in twelve States calls for a light generating 1500 candlepower. Recent tests have shown that with a 120-candlepower lamp with the proper reflector, objects were picked up from 1 4/5 to 2½ times as far ahead on the track as by the higher candlepower legally approved lamp. J. G. Scrugham in a recent article on electric headlights,* in commenting on the candlepower ratings of headlights, stated that "there seems to be an almost unanimous opinion that the light reflected ahead should be of sufficient volume to enable the engineer to discern any serious obstruction on the track in time to prevent or minimize the danger of an accident,—that the object must become visible at a distance of 500 to 1000 feet (the braking distance of an express train running 60 miles an hour is 1200 to 1500 feet, depending upon road conditions) and that the light should not be so strong and dazzling as to blind observers or approaching enginemen." It has been shown that an illumination intensity of 1/10 footcandle (the intensity of illumination from a source of 1 candlepower at a distance of 3.16 feet) is sufficient to render distinctly visible at the distance of 1000 feet a dark object the size of a man. Prof. Scrugham advised that all trials should be based on the discernment of dark objects on the track, also noting that a 500- or 5000-candlepower light was of little use in preserving the lives of the traveling public unless properly reflected and directed where needed.

An ideally perfect projector would have a uniform parallel beam at all practical distances, a condition that is neither actually realizable nor practically desirable. In practice any headlamp may be considered as producing a slowly diverging beam, the luminous intensity in any direction near to the axis falling off nearly inversely as the square of the distance from the headlamp. At considerable distances this approximates in photometric behavior to a point source. There is no more difficult or exacting problem in light control than the projecting of the necessarily narrow bundle of light rays directly ahead and downward as required for automobile headlight service. It is necessary that the reflector be so designed that every ray of light impinging on its surface will be redirected in a line parallel with the axis of the reflector. This is done with a parabolic reflector. In the case of the reflected light the source of light must be placed at the focus *F*, Fig. 1. There will be a cone of light as shown in Fig. 1, 100 degrees in the case of the metal reflector and 142 degrees with the Matisse spherical paraboloid reflector

*Journal of Electricity, Power & Gas, Feb. 7, 1914.

Digitized by Google

which will not be under the influence of the reflector, but the remaining light falling within the reflector will be projected along the lines parallel with the axis. With a perfect reflector and a point source of light in a clear non-absorbing medium this beam would be projected to infinity without increase or decrease of intensity. The equivalent candlepower of this beam, in terms of an unreflected light source, would be stated in accordance with the law of inverse squares. At a distance of 1 foot from the source the reflected apparent candlepower of a 24-candlepower bulb would probably by about 70 candlepower, which at 100 feet would be 10,000 times this amount, or 700,000 candlepower. Owing to the

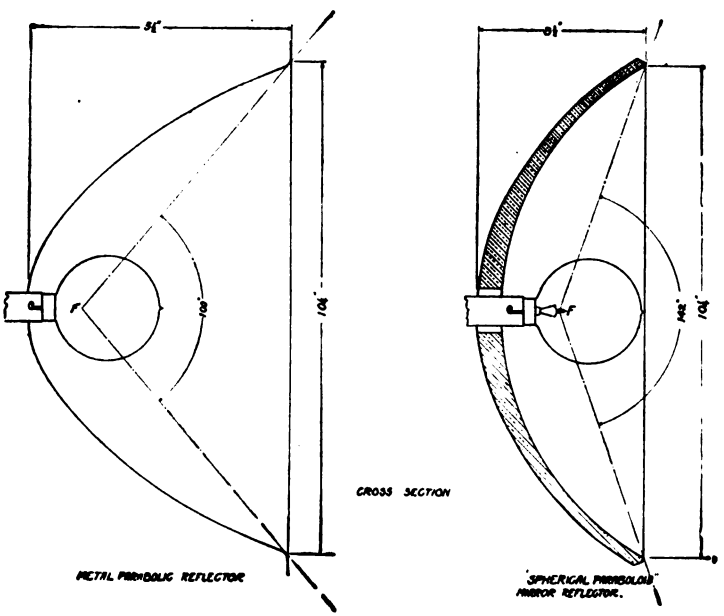

Fig. 1.

limitations in practical reflector manufacture and particularly the impossibility of obtaining a true point source of light, the rays emanating from the portions of the incandescent filament outside of the focal point of the reflector will diverge depending upon the ratio of the maximum distance of part of the light source from the focal point, to the focal length of the reflector. With a 2¼ inch focal length and an overall length of incandescent filament of less than a half inch, it has been possible with a spherical paraboloid reflector to confine the light reaching the reflector within the remarkably small angle of approximately 3 degrees. The width of roadway covered by a beam of this divergence is 10½ feet at 200 feet ahead, 21 feet at 400 feet head, and 31½ feet at 600 feet distant. With two headlamps the beams may be

Digitized by Google

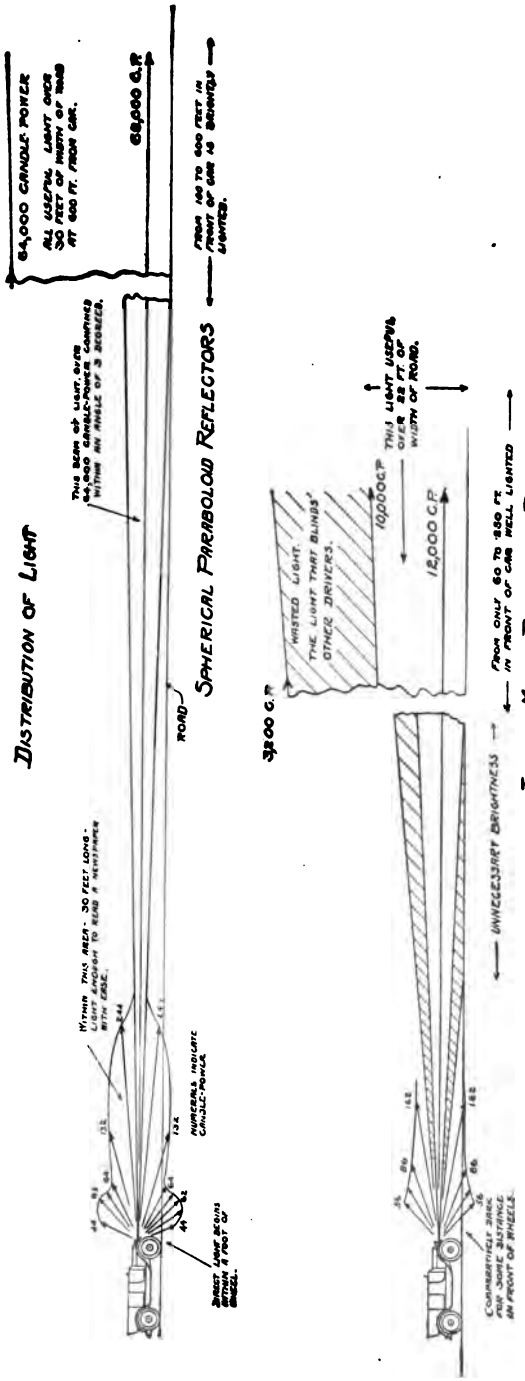

Fig. 2.—Graphical representation of the distribution of light from spherical paraboloid and metal reflectors. The length of a line from the curve to the lamp represents the apparent candlepower in that given direction. The reflectors on both cars are equipped with 24 candlepower mazda bulbs.

Digitized by Google

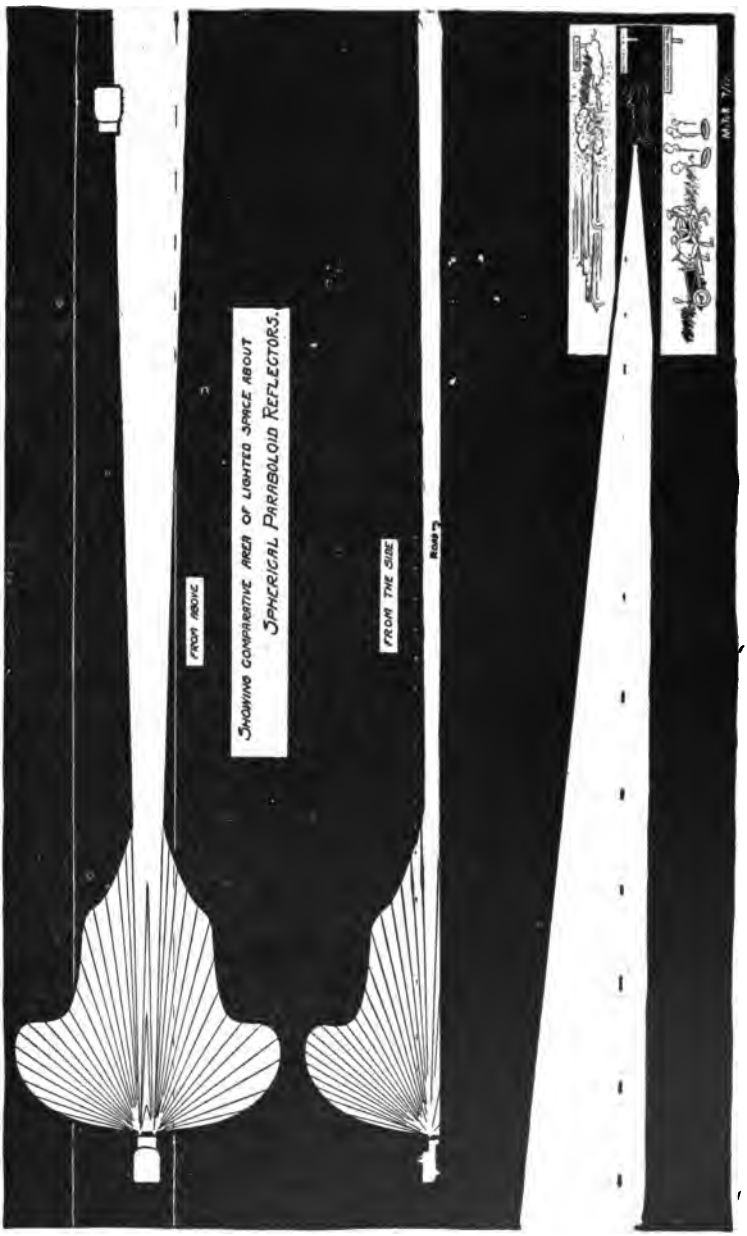

Fig. 3.—Beam of light from two spherical paraboloid reflectors. The approaching car, on the right, is outside the zone of light at 250 feet from car. "Eye-height" is shown by the dotted line. Below, th e light from the usual reflector, most of the beam above eye-height.

Digitized by Google

paralleled or combined to cover a greater or less width of road as may be desired; the lamps to be adjusted so that the top of the beam shall not be more than 5 feet above the road at 400 or 500 feet ahead.

The back or outside surface of the spherical paraboloid mirrored glass reflector is ground to parabolic form, plated with pure silver in airtight contact with the glass, and reinforced with a heavy electroplating of copper which in turn is further protected with a noncorrosive heat-resisting metallic paint. The inside or exposed surface of this reflector is of polished glass hemispherical in form, resulting in a varying thickness of glass from the apex of the parabola to the outer edge. This varying thickness of glass results in a refractive action of the light rays tending to increase the efficiency of the parabola.

Tests were made by the Electrical Testing Laboratories, New York, of the two reflectors shown in section in Fig. 1. The metal parabolic reflector chosen was of the best kind procurable and was plated and carefully polished prior to the test that the most representative results might be secured. A 24-candlepower mazda automobile bulb of the focusing type was used in the tests and the photometric distance was 30 ft. with check tests at 50 ft. and 75 ft. These latter tests showed that the beam from each reflector was divergent and that the illumination intensity varied with the inverse square law.

The remarkable efficiency of the glass reflector was shown by a beam candlepower of 34,000 with 4,000 at 2½° and only 120 candlepower at 5°, showing a practical confining of the beam within the desirable narrow angle of less than 3°. As this reflector is shallow, there is a large proportion of the light from the lamp available for the illumination of objects from immediately in front of the wheels to 30 ft. distant.

The results of these tests are shown in graphical form in Fig. 2. The apparent candlepower values, as two headlamps are used on each car, were combined, resulting in a beam intensity of 68,000 candlepower with the spherical paraboloid reflector and 12,000 candlepower with metal reflectors. In plotting the latter the extra width of beam is cross-hatched. This represents that portion of the light which cannot possibly be effective but which through its blinding action actually renders many accidents not only possible but is also directly the cause of them.

The recent production by the incandescent electric bulb manufacturers of the ductile tungsten wire in a concentric helix form of filament, results in a remarkably concentrated light source which will admit of a concentration of light not possible with any of the light sources heretofore available. These bulbs will admit of a beam 13½ times the intensity possible with the older types of bulbs, when using, of course, properly designed reflectors. In making up bulbs it is not commercially practicable to get the filament in exactly the same position in every bulb. Although the limits recognized are small (about 1/16 of an inch), provision should be made for adjustment of the bulb socket so that the filament can be centered accurately at the focal point of the reflector. Means

Digitized by Google

should also be provided for the proper adjustment of the headlamps in relation to the width and height of the lamp brackets.

There can be no possible deterioration of the glass reflectors—the silver surface is protected from the air and the polished glass interior surface can be kept in perfect condition by merely wiping off or washing out the accumulated dust. It may be possible to stamp or spin a properly designed metal reflector. The metal finish, however, becomes tarnished and dust-covered with a consequent loss in light control and high absorption; then with repeated cleaning and polishing, the dust particles on the reflector when rubbed over the metal surface to be cleaned must scratch it up thoroughly, each scratch, even though microscopic, serving to change the direction of the impinging light rays. I have seen reflectors which had been in use only six weeks badly scratched. Others, having practically a dust-tight housing and plated with nickel, which, while not as good a reflecting surface, does not tarnish as rapidly as silver, have appeared to be in reasonably good condition even after several months' use. A thoroughly scratched metal reflector, although conforming in contour to an ideal parabola, will have about the same light-distributing efficiency and width of distribution as would result from an enameled wash basin used as a reflector.

For city driving, in addition to using effective reflectors, a switch may be used which will temporarily reduce the light produced and also the energy demand, by using the lamps in the two headlights in series. Another device is now being perfected whereby by pressing a button on the dash, the incandescent electric bulbs will be tilted upwards in these present reflectors, just enough to alter the focus, with the result that all the reflected light is directed on to the roadway within a hundred feet in front of the car.

Joseph T. Roffy:—In constructing a glareless lamp the first thing is to eliminate the direct glare of the filament; second, the projected beam should not rise above 4½ feet from the ground; third, the projected beam should be in a uniform field of light.

The projected field of the Roffy lamp is an achromatic field free from streaks and rings due to image formation that characterizes parabolic or other reflected beams of light. The lamps when mounted on a car project a cone of light as shown in Fig. 4.

A series-parallel switch is provided for use when the car is standing, and in traveling lighted streets. There is no glare, no matter at what position the switch may be; the turning-down feature has merely a point of current economy.

The lamp weighs about 2 pounds, and is fastened to the radiator by bolts. The aluminum brackets, being softer than the ordinary radiator metal, cause no injury.

The filament in the bulb takes four amperes on a circuit of 6 to 7 volts. Above the globe are two condensing lenses. The filament lies in the center of the optical axis. The light transmitted by the lenses is

Digitized by Google

Fig. 4.

projected against a French mirror located in the top of the lamp, acting as a prism, projecting the light in the direction of the focusing lens. If the light of a coil filament in any plain condensing lens system, or reflecting and condensing or parabolic reflecting system, is projected, the projected light is a glare. The light cannot be restricted within a sharply defined area, due to the physical dimensions of the filament. All the last-mentioned systems rely for light projection on the magnification of the light source. In the lamp shown in Fig. 5 the light transmitted by the condensing lenses is rectified to an achromatic field by a focusing lens, and by

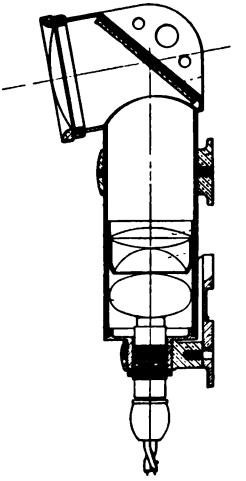

Fig. 5.

Digitized by Google

the prismatic action of the mirror between the focusing and condensing lenses. The projected beam of light emerges from the device sharply defined.

LEONARD KEBLER:—There seems to be little doubt that a number of accidents to motor cars are caused by the driver of the car being blinded temporarily by the exceedingly powerful headlights, whether electric or acetylene, of an approaching car, or a standing car facing in the opposite direction. Steps have been taken to eliminate this dazzle in a great many cities, such as New York, Chicago, etc., by prohibiting the use of lamps which will dazzle or confuse pedestrians or drivers. As yet no steps have been taken to cover the use of such dazzling lights on the highways in the country or through the smaller villages. There seems to be little question in anyone's mind now that some provision must be made to take care of this. A proper device should have the following features: First, it must be possible when in the country or on less traveled roads to get the full power of the searchlight beams. Second, it must be possible when passing pedestrians or vehicles or running in the city to immediately change the character of the beams so as to make it non-dazzling, while still preserving a light which will illumine the road sufficiently for safe driving. Such light should be so diffused as to illumine the sides of the road when going around curves. Third, the change from the searchlight beam to the non-dazzling light must be made without any movement on the driver's part other than the pushing of a button or some similar motion which will not disturb his control of the car.

One manufacturer has been experimenting along the lines of the above specifications for a long time, and finally at the New York show in January, 1914, showed a device practically the same as I am showing to-night. The device consists of a series of translucent screens which normally stand parallel to the axis of the beam of light, so that they do not obstruct the light, but upon pushing a button they are electrically actuated so as to be placed at right angle to the beam of light, thus placing a curtain of translucent material between the bulb and the front of the lamp. As a result the light, instead of being condensed at one point, as is the case of the filament of an incandescent lamp bulb, becomes a plane of the size of the screen. This large plane of light gives a mellow, diffused illumination ample for driving up to 25 miles an hour on the darkest night, and gives an exceptionally good driving light when going around curves on narrow roads or driving in the city, without in any way inconveniencing pedestrians or drivers going in the opposite direction. The operating mechanism consists of a small solenoid placed out of sight alongside of the screen.

The greatest danger due to headlights is when two cars approach an elevated ridge or a crest in the road, so as not to be visible one from the other, until they appear suddenly only a few feet apart. Any one who drives a car is familiar with such situations as this.

It does not seem sufficient to dim the light until it becomes non-dazzling, because if this is done there is not sufficient light left to illuminate

Digitized by Google

the road. Similarly it is hardly sufficient to screen part of the light—that is the upper part, so that only the lower beam strikes the road, because in going over knolls, ridges, etc., as noted above, this does not eliminate the trouble.

I believe that the specifications given above are those of a good headlight device which will enable the user to drive safely in passing other cars in the country and in going about the city.

DR. WILLIAM CHURCHILL:—One phase of the question of glare has not received the attention it deserves. As has already been remarked, a definition of glare is difficult to give. I suppose we are entitled to say roughly that any light produces glare which interferes with the acuteness of vision of adjacent objects. In that connection it is important to remember that there are several factors involved in the production of glare. One point, which is not always considered, is that whether a light is glaring depends not only on the actual candlepower and intrinsic brilliancy of the light, but also on the average candle-foot illumination of the environment. I saw that point brought out forcefully recently in connection with some work I have been doing on certain railroad signals, where it was important to use very powerful illumination for daylight indications. The same lamps that were just sufficient to give a good signal in daylight were quite dazzling in intensity at night. As twilight came on until total darkness was reached we could see the gradual increase in glare. The lights were identically the same throughout. The only changed condition in that case was the decrease in the illumination of the environment, but that change involved an effect on the pupil of the eye. Of course, as the illumination was reduced the pupil gradually opened further, so that the same light which by day was not at all glaring, by night became dazzling. It would be hard to find a better illustration of the fundamental fact that a light appears glaring only when its intrinsic brilliancy is high compared to the average illumination of the environment. Another important factor in determining glare is the apparent area of the light-emitting source; in other words, the visual angle actually covered by the light-emitting source or the area of the retina directly affected by the light in question. Of course, the larger the area the more intense the glare produced. Finally, there is a third factor that I want particularly to discuss—the quality of the light. Unless you have had occasion to look into the literature bearing on this subject you may not realize that whether a given light source produces glare depends largely on the composition of the beam—the proportions of the several spectral hues present in combination. To save a lengthy statement I want to read you a few words on that subject from an authority you will all recognize, Dr. Steinmetz, of Schenectady. I quote from "Radiation, Light and Illumination": "The light which enters the eye is converted into heat, and if its power is considerable it may be harmful or even destructive, causing inflammation or burns. This harmful effect of excessive radiation is not incident to any particular frequency, but inherent in radiation as a form of energy. It is, therefore, greatest for the same physiological effect, that is, the same

Digitized by Google

amount of visibility, for those frequencies of light which have the lowest visibility or highest power equivalent, that is, for the red and the violet, and least for the green and the yellow, which for the same amount of visibility represent least power. Hence, green and greenish yellow lights are the most harmless, the least irritating to the eye, as they represent the least power."

In the same connection: "The human organism has by evolution, by natural selection, developed a protective mechanism against the entrance of radiation of excessive power into the eye; at high intensity of illumination the pupil of the eye contracts and thus reduces the amount of light admitted, and a sudden exposure to excessive radiation causes the eyelids to close. This protective mechanism is automatic; it is, however responsive to long waves of radiation, to the red and the yellow light, but not to the short waves of green, blue and violet light. The reason for this is apparently that all sources of excessive radiation which are found in nature, the sun and the fire, are rich in red and yellow rays, but frequently poor in rays of short wave length."

Quoting from the Bulletin of the Bureau of Standards, Circular No. 28: "A light yellow screen is very effective in eliminating a purple haze in viewing distant objects and thus heightening contrast in an otherwise 'flat' field. The extreme contrast produced by the direct reflection of sunlight on water cannot be avoided (being nearly non-selective), but the maximum intensity may be reduced at the sacrifice of the low lights, or the glare may be 'softened' with a yellow or orange screen which eliminates the more fatiguing blue and violet."

These passages clearly indicate that in order to reduce the glare in any automobile headlight to a minimum and admittting that a rather high beam-candlepower is necessary, as we all know, for lighting up dark highways, it is highly important to provide the essential candlepower of such color as to produce the least possible amount of glare. Therefore, I ask your attention to a light yellow glass which has been developed as the result of experiments covering a period of several years, with the object of providing light of the most effective quality for headlight illumination.

The idea first occurred to me in connection with some tests of railroad headlights which I witnessed several years ago, in which all sorts of headlights were being tried out under a great variety of conditions, and when I was strongly impressed by the conclusion that the quality of the light was one of the most important factors in the problem.

There is a very great increase in intrinsic brilliancy of the light source which we are using now compared to those of a few years ago. That fact is really at the bottom of this whole question of glaring headlights.

Three kerosene burners are commonly used in railroad service—the old-fashioned "signal burner," what is called a long-time burner, which is of more recent development, and the headlight burner. Below them comes the acetylene flame, which is decidedly higher in brilliancy. Of course, as intrinsic brilliancy goes up the glare increases. Further down we note an ordinary incandescent bulb with open filament and also one

Digitized by Google

Intrinsic Brilliancy of Sources

	C. P. per cm²
Kerosene—	
One-day	.65
Long-time	.8
Headlight	3.0
Acetylene	6.5
Mazda 25W	4.
" 100W conc. filament	67.
Luminous arc	850.
Right-angle arc	2,000.

with concentrated filament. The automobile bulb will not show as high intrinsic brilliancy as the 100-watt bulb, but in the small area covered by the filament comes quite close to doing so.

The "no-glare" yellow glass transmits the red, orange, yellow and green and stops just about at the commencement of the blue. I do not want to leave the impression that the red, yellow and green light cannot produce glare. Light of any color, if you have enough of it, will be glaring, but the blue and violet rays are the principal offenders and the ones which we can properly eliminate without interfering with range of vision. The total amount of red light in ordinary sources is small. The maximum intensity is in the yellow and green and a very small amount is shown in the blue and violet. I am referring to such light as the sun or light approximating it. An incandescent bulb is not greatly different, but shows relatively more yellow and less blue. The most striking characteristic of the special yellow glass is the tremendously high transmission it shows in every region of the spectrum except the blue and the violet. The ordinary yellow glass is utterly unsatisfactory and unsuitable for the purpose we are discussing now, for the reason that it absorbs a great deal too much useful light.

It may interest you to know that the application of yellow light to headlights is only one of a number that are rapidly coming to the front. For example, yellow glass, practically the same glass we have here, is now used by crack shots in making their best scores, because they find they are able to see much more distinctly with the yellow glass than they can without it.

You all know that the problem of glare is not simply a question of glare in the eyes of the other fellow coming toward your headlights or the glare that you receive from his headlights. If you happen to run into a bank of dust or fog or smoke you get a very annoying "back-glare" from your own headlights, and the higher the intensity of the headlight the worse that effect will be. It has been abundantly proven in a great variety of ways that in order to get the best penetration in smoke, dust or fog you need a yellow light. That was first demonstrated by the French navy some years ago in trials of gold-plated mirrors. Then it was found that the gold-plated mirror was not necessary at all; by simply using a yellow glass you can get even better results, provided the glass

Digitized by Google

possesses the proper characteristics. The sun when rising or setting always looks reddish. There is only one explanation of that fact—as the light passes through the dust and smoke and haze of the atmosphere the blue rays are cut off, absorbed or diffused, while the red and yellow rays penetrate more easily. That illustrates in a homely way that it is the blue end of the spectrum which is mainly responsible for the diffusion and refraction which produces the annoying "back-glare" in the case of the automobile headlight. If when driving on a foggy night you can get 10 or 15 ft. more illumination ahead by eliminating a certain amount of "back-glare" it oftentimes means a great deal.

These are, in brief, the main facts I desired to illustrate, and I would ask you to bear in mind that the point which I have emphasized is the question of quality of light. It has nothing to do with mechanical contrivances of any sort. There are many different methods and means by which lights can be dimmed, either by using an auxiliary bulb or by using resistance or by raising or lowering the bulb, etc. But aside from all that there remains the question of the proper quality of light to use—the proper color for headlight service.

Otto Luyties:—One type of headlight glass or globe throws a narrow beam far ahead on the road, a sufficient beam to see quite distinctly by, and throws diffused light to either side. There is a wide arc of illumination, exceeding 180 degrees. The front of the car is plainly visible, especially the radiator and front tires.

The central transparent portion is only about one-quarter of that of an ordinary headlight. It should be noted that size alone has a good deal to do with blinding effect. A small headlight will generally be less blinding than a large one, even if the candlepower be the same and the curvature of the reflector such that the amount of distant light projected is the same. If a pedestrian sees a bright light on the road a foot in diameter he will ordinarily be more blinded than if he sees one of only a quarter of that area. Horses are affected in the same way.

Another reason that the light is non-blinding is because it is seen against an illuminated background. You all know that the moon is less blinding when seen against a bright sky in the day time than when seen against a dark sky at night. Using this device the illuminated background provided by the frosted portion of the glass tapers off in brightness from the center to the edge. I have found by careful experiment that one of the things that causes light to be blinding is contrast with absolute darkness. The human eye has for many generations been accustomed to see things by ordinary daylight. There is no very sharp contrast in nature except the sun itself, against which our eyelids form a certain protection.

The globe throws diffused light laterally, thereby illuminating the radiator and front wheels. If you can see the radiator and front wheels of an approaching car you do not have to stare at it for any length of time in order to make out in just what direction it is going.

The bright filament is shielded by the ground glass portion of the globe at almost all angles of observation. If you get directly in front of it there

Digitized by Google

is a point at which the light will be more or less blinding. A headlight to be really non-blinding must be non-blinding in an uptilted position, as when passing over a bridge or two cars meet at the top of a hill.

The spherical frosted front has about 50 per cent. more area for light diffusion purposes than a flat front. It is possible, of course, to use a higher candlepower bulb without having too high intrinsic brilliancy per square inch.

This headlight is visible from the side, which produces a useful and attractive effect, and it remains visible for some time when passing the automobile, which is of assistance. You know that sometimes cars are sideswiped in passing on the road from crossing too soon.

A light of this kind apparently becomes dimmed automatically when brought into a lighted city street; as any translucent frosted surface illuminated from one side becomes less bright in appearance, compared with surrounding objects, if a bright light falls upon the other side. Some of the old-fashioned photometers used to work on that principle.

It should be observed that three-quarters of all the light thrown by an automobile headlight is projected by the central portion. This is due to the fact that the central portion of a parabola is nearest to the light and situated at the most favorable angle. I do not mean the exact center, as the direct light does not amount to much, but I mean the central portion of the lens right around the bulb. That is the best part of any correct parabola, and, of course, it is nearest to the filament. The central part is the part which we conserve for distant light. Therefore, if an automobile headlight be frosted over three-quarters of its front surface the central portion of the parabola being left exposed, the greater part of the reflected light will still reach a distant object, the rest of the light being diffused in the foreground.

Slightly higher candlepower may be used with this type of glass, if the same distant light is desired. It should be noted, however, that many of the present headlights give more distant light than is reasonably required. I think you will all agree on that. Furthermore, it should be observed that quality of light is as important as quantity, and a fairly bright, white illumination, containing a good percentage of diffused light is better to see by and less tiring to the eyes of the observer than a somewhat brighter direct light. We all know that diffused light is the best light to see by. Personally I think that white light is the best to see by. In newspaper offices they cultivate the blue rays of the spectrum. They have lights that have very much blue in them, mercury lamps, and they can see very well and pick out little details. If you have lights of very high candlepower you can dim them with some mechanical device and get very good results. But for a distant object, where the amount of light is limited, I think you do better with white light, because it makes the object stand out better, particularly against the dark, oiled roads that we have now.

A. L. McMurtry—One of the greatest drawbacks to the early electric lamps was the fact that the engineers attached them to a car as they did

Digitized by Google

the lens mirror searchlights, with little or no attention regarding the direction of the light. The small angle of light from an electric lamp as compared to the gas lamp, makes it necessary to fit the electric lamp more exactly. I think that 50 per cent. of the dazzling effect of electric headlights is due to the poor aiming of the beam of light, or defective focusing. The Locomobile company have a dark gallery into which a car is driven and the lamps properly directed and focused. The lamps are mounted on brackets heavy enough to keep them in the proper position.

We have heard about dazzling lamps, but not what causes the dazzling effect. All brilliant lamps with a dark background appear to the eye larger than they really are. The phenomenon is known as irradiation. It is due to the sympathetic action of the sensitive nerves of the retina of the eye adjoining those which actually receive the image of the lamp. The greater the contrast between the brilliant lamp and its surroundings, the more pronounced the irradiation.

All electric headlights use parabolic reflectors, so that the rays diverging strictly from the focus and falling on the paraboloid, emerge in one beam of parallel rays. However, as the filament of a tungsten bulb is not a mathematical point but an object of considerable magnitude, the rays from the outside being exfocal will after reflecting emerge as a cone.

Two years ago I made some tests of lamps with filaments of various forms. I found that the smallest form of filament gave the best light as far as distance was concerned, but there was very little light directly in front of the car. The average filament gives a greater angle of light, and when focused so that the light falls upon the road in front of the car, the rays are at an angle that gives the greatest dazzling effect.

I have arranged the lights on my car so that the left lamp is focused to a parallel beam and the right lamp spreads the light directly in front of the car. The right lamp is at such an angle that the light does not rise above the radiator of an approaching car. If the light of the left lamp dazzles it is turned out by a separate switch.

In regard to candlepower of tungsten bulbs, there is a great difference between candlepower and intrinsic brilliancy. The former is total candlepower, while intrinsic brilliancy is really candlepower per unit of area. If you take a lamp which is burning over voltage—that is, a 5-volt lamp burning at 6 volts—you will get a high intrinsic candlepower, the intensity of which will project the light a greater distance. If, on the other hand, you use a 24-candlepower lamp burning on rated voltage, you get more light with less intrinsic value. Therefore a 24-candlepower lamp will not penetrate distance, but the larger filament, the most of which is exfocal, will give a wider beam of light, which will dazzle the driver of another car much longer than a properly focused 15-candlepower lamp

Another thing that few people properly consider is the height of the lamps from the ground. The higher the lamps are mounted the more they are directed down and the less they are apt to dazzle.

I think that the first anti-dazzling device made was the Wridgeway. It was arranged to be fitted to lens mirror searchlights. It resembled a

Digitized by Google

honeycomb radiator placed in front of the lamp so that the only light projected was almost a parallel beam. The device was not a success, for the reason that it restricted the light of the lamp to which it was fitted without any relief to the owner from other dazzling lamps.

I believe there are enough different devices now on the market that legislation can properly require anti-dazzling lamps. Until it is passed it will be a hardship to a driver to alter his lamps in order not to dazzle the other man whose lamps dazzle.

It is interesting to see the different systems of preventing the dazzling effect of lamps, and while we are considering the adoption of any system by a manufacturer I would like to cite a little instance: Different lampmakers submitted their proposals for lamp equipment on a certain make of car. The matter was up to the purchasing agent to decide. One proposal called for a complete set of five electric lamps, with parabolic reflectors and an adjustment for focusing. Another called for a fixed socket in all lamps, with parabolic reflectors in the headlights only. There was a difference of $1 in the price of the two sets, yet the cheaper and less refined set was contracted for. The point is that when a new device is submitted to manufacturers the question with most of them is cost and not efficiency.

LEONARD KEBLER—In the matter of adjusting headlights, I think it is safe to say that for the average equipment the best results are obtained by having the top of the headlights between a quarter and three-eighths of an inch further out than the bottom; in other words, the headlights tipped down to that extent. Then if the user will lay a straight-edge across the lamps and have the inside edge of each lamp a quarter or three-eighths of an inch further back than the outside he will get illumination on the sides of the road much better than if the lamps are parallel. As a rule headlights adjusted that way will give about as satisfactory results as you can get.

A. L. MCMURTRY—I would like to make a suggestion about adjusting headlights in daylight: Light the lamps and stand in front of them, keeping your eyes just outside of the beam of reflected light. In this position you will see a small area of the reflector illuminated. By moving from side to side the illuminated area can be made to move about the reflector. Find a position where the reflection is vertical Your eye will then be in the vertical plane in which lies the beam of light.

In a similar way, by lowering your eyes, while keeping at one side of the beam, the illuminated spot on the reflector may be brought into a horizontal position. The position of the eye at that instant locates the horizontal plane in which lies the beam from the lamp. The intersection of these two planes determines the direction in which the headlight is aimed.

HERBERT CHASE—It appears to me that several of the devices exhibited here this evening are inefficient from one standpoint, in that they utilize such a small amount of the light that is actually thrown from the reflector. If it is true, as one of the speakers has contended, that the blue and the violet rays are the ones that actually cause the glare or are largely

Digitized by Google

responsible for it, it would seem that the logical way to reduce or eliminate the glare is to cut off those rays by some sort of screen, and then, if illumination is dimmed by that procedure to an appreciable extent, slightly increase the candlepower of the bulb. It seems to me that the logical solution of the problem is first to control the direction of the beam without cutting off any large proportion thereof, and second to change the quality of the light so that it will not be blinding when by chance it strikes the eye of a pedestrian or driver of an approaching car.

Otto Luyties—A glare a foot in diameter is always a foot in diameter, no matter what color it may be. If you change the color so that it is less blinding you will also see by it to a less extent. If you feel that yellowish light of a particular type is less blinding you must also realize that it is less irritating to the eye; therefore it is less stimulating to the eye; an object having a yellow light thrown upon it will affect the eye less, and therefore be less visible.

If you throw yellow light on a person standing on one of our brown oiled roads I think you will not see him as distinctly as you would by white light.

Dr. William Churchill—It is well established by any number of authorities that the region in the spectrum where light-energy is most effective on the retina—where per unit of energy the luminosity produced is at the maximum—is in the middle of the spectrum, in the neighborhood of the yellow and the green, and obviously luminosity falls off at the two extremes of the spectrum. In other words, an infinite amount of infra-red or ultra-violet could not produce vision.

In this connection an instance occurred to me during the discussion that may be worth mentioning, as it brings out the relative advantage of light of different qualities. In a very large establishment there was a great deal of complaint by some of the clerks who were obliged to do much reading and writing at night under bluish light. A careful investigation was conducted by one of the highest authorities in this country to determine whether there was any ground for the complaint. It was definitely established as the result of the investigation that the clerks who were using chiefly white paper, and thus getting a relatively large percentage of the blue and violet rays, were the only ones whose eyesight was affected, while the clerks who used chiefly yellowish paper, which reduced the proportion of blue and violet light reflected were apparently free from bad effects.

Mr. McMurtry referred to the difficulty of getting the individual to put on a device which will reduce glare because although it might help a man's neighbor, it is not going to help him very much. He should be taught that if he equips himself with a yellow light of effective quality he is going to be distinctly better off in fog and smoke himself, as well as furnishing a light that is more satisfactory to the other man; and if his neighbors and friends are not sufficiently generous to equip their cars with devices that reduce the glare, he can take refuge in the use of a small

Digitized by Google

yellow windshield, which will eliminate all the serious glare of any headlights he may encounter. I mean a small disc fastened to the windshield or steering post.

One other point that I think ought to be emphasized is that, so far as possible, in the effort to eliminate dazzling headlights and to solve the headlight problem, we ought to try to avoid complications of one sort or another that will require constant attention from the operator of the car. If the device needs to be turned on and off at frequent intervals it is not going to be used. If a man has to keep pressing buttons or turning switches on some such device all the time it is going to require a great deal of his attention. Therefore, it would seem desirable to work the problem out as far as possible along lines which will require the minimum of attention from the operator of the car.

HERBERT CHASE—I would like to ask Dr. Churchill what his opinion is as to the visibility of objects with a yellow light, and also if he will say a word about the recent investigation conducted by, I believe, the Master Mechanics' Association regarding the locomotive headlight, which has some bearing on this subject?

DR. WILLIAM CHURCHILL—To answer briefly the question regarding the visibility of objects, the special yellow glass cuts out, by photometric measurement, approximately 15 per cent. of the total amount of light. In that connection bear in mind that the range of a headlight varies as the fourth root of the intensity of the beam, so that a diminution of 15 per cent. of the total amount of light would not reduce the range very much if other condititons were equal. As a matter of fact you increase the range of vision because you cut out to a large extent the effects of haze, fog, smoke or dust; you gain more in that way than you lose by the reduction of intensity. As I mentioned early in the evening, it has been demonstrated by those who are better able to prove the point than I am, in the army and navy, where marksmanship requires the best possible acuity of vision, that yellow glass gives increased acuity and that the amount of light absorbed is far more than offset by the advantage gained otherwise.

In reference to the other point, that is really too long a matter to discuss this evening, but just to show how much has been done on the subject here is a volume of 330 pages covering a report presented at the American Railway Master Mechanics' Association several weeks ago at Atlantic City, involving an investigation that lasted three or four years on the whole subject of headlights as it applies to locomotives on steam roads. They have tested out all sorts of headlights and give groups of photometric curves and actual service tests, tests to determine whether the observation of signals was interfered with by the use of headlights. To sum up their very thorough work in a few words, they reached the conclusion that in steam railroad practice the maximum headlight illumination that should be permitted from the point of view of good service, the maximum which they felt it was safe to allow without interfering with the observation of landmarks and signals and without producing

Digitized by Google

glare in the eye of the engineer coming in the opposite direction, was a beam of 3,000 equivalent candlepower, with a minimum of 500 equivalent candlepower.

Something was said awhile ago about the size of the reflector being the chief factor in determining glare. That statement probably requires qualification. The amount of glare depends, of course, partly on the size of the reflector, but it depends primarily on the intrinsic brilliancy of the source of light. To mention an illustration in point, an oil headlight burner such as I mentioned earlier in the evening has an intrinsic brilliancy of about three candlepower per square centimeter. The reflector usually measures about eighten inches in diameter. The total candlepower of the beam is possibly 3,000. Now if you were to set in that reflector the concentrated filament of an incandescent bulb you would get a very different result. Instead of using, as they do in a locomotive headlight, a thirty- or forty-candlepower lamp, you might use only a five-candlepower concentrated filament bulb, but you would get a much more glaring light, on account of the concentration of the filament.

The conditions which are met with in steam railroad service are different from those which are encountered in driving an automobile, and the chances are that what is sufficient illumination on the steam road would hardly be enough in automobile headlight service. But any of you who are interested in this question of headlights would, I think, find it worth while to look over the data in this report, which is undoubtedly the most exhaustive study of the subject of headlights that has ever been made in this country.

GASOLINE-ELECTRIC VEHICLES

CHAIRMAN ANGLADA:—I think that the best way to open the discussion will be to ask Mr. Dey to present a short paper he has prepared. We all remember that in the old days, when there was a lot of controversy relative to the make-and-break and high-tension sparks, one said the high-tension spark was the best type of ignition and another that the make-and-break gave the hotter spark. I think that about the same condition exists now relative to the gasoline-electric transmission. A number of engineers I know who have not had any experience with it absolutely condemn it, and others who have had experience are not very warm in its praise. I hope that the men present who have had experience with other forms of transmission not so well-known as the conventional type, notably the hydraulic transmission, will state their views as to the shortcomings of the electric transmission. Let us try to bring out the good and bad features as far as possible. Give us something to think about, because undoubtedly the electric transmission and the hydraulic and perhaps other types are coming.

Digitized by Google

HARRY E. DEY:—In the course of an article appearing in *Horseless Age* describing motor starters exhibited at the shows a year ago, I made the following remarks: "Is the electric starter of the flywheel armature type a step in the evolution of the combination gasoline-electric machine? It would appear that if this outfit were made larger it would recharge the battery whenever the engine had surplus power, and give the power back to assist the engine whenever overloaded. The electrical equipment could be comparatively small in rating compared with that of the engine. A number of inventors worked along these lines in the early days of the automobile, but for some reason unknown to the writer did not succeed in commercializing the system. Perhaps they were too far ahead of the times, and we may yet get this system as an evolution of the motor starter." I have favored this system for the past fifteen years or more and I still believe it is the best solution of the gear-box problem of the gasoline car.

In all the experiments I have become acquainted with it has been customary to retain the sliding gear. This appears to me to negative nearly all the good features of the system. We have to all intents and purposes an electric vehicle, capable of being driven by its electrical equipment alone. We do not require a change of gearing on an electric. Why should we with this outfit which has the assistance of the gasoline engine? My idea of such an outfit would be: an engine of twenty to thirty horsepower, having a flywheel of the motor dynamo type of about five horsepower, compounded in such a manner that the windings are in differential relation when the current is going to the battery, and cumulative when the latter is discharging. This will tend to keep down excessive charging rates and at the same time provide the motor with the general characteristics of the series machine. A battery of 100 ampere-hours at 60 volts should be sufficient for all ordinary purposes.

If desired a reversing gear could be provided, but this is not absolutely necessary, for the engine can be shut off and the electric motor reversed, driving the engine backwards. Another method would be to have a double-acting clutch that would disconnect either the engine or wheels or both. With this arrangement it would not be necessary to reverse the engine, simply backing the car with the electric motor; and in case the battery charge becomes low, the rear drive can be thrown out of commission while the engine drives the dynamo to recharge.

I presume there will be some criticism of the small electric motor rating in comparison with that of the engine. It is general practice at present, however, to allow about two horsepower per ton for driving electric pleasure cars running at twenty-five miles per hour. So it would appear that five horsepower or even less should be ample when we take into consideration that it is only the excess load that the motor has to take care of.

A battery of the rating mentioned should be able to drive the car, without the assistance of the engine, twenty to twenty-five miles; consequently there should be no danger of its becoming exhausted except in extreme cases where one might travel for many miles on a steep upgrade

Digitized by Google

in a mountainous country. There are few such places in the world, however, and even in such an extreme case one could stop and recharge the battery with the running gear thrown out.

The additional weight of such a machine need not be more than from three to four hundred pounds, for it must be taken into consideration that we are replacing the flywheel, generator for light and starting, starter, battery and gear-box.

The speed control on the lighter loads would be very largely, if not entirely, through the throttle and field, but when the load was such that the battery was being drawn upon, the control would be upon the electric motor, by varying field strength and perhaps in addition by multiple-series battery control.

In addition to the ease of control of such a machine there would be the added advantage of being able to ascend hills at nearly maximum speed, and also that in case of running out of gasoline or a breakdown of the engine, one could run several miles without the assistance of the engine.

I believe that the efficiency will be fully as high as with the present mechanical transmission, due to the fact that the battery is merely floating on the line. The electrical equipment takes care of the abnormal loads only, and on down grades power will be recovered from the action of gravity, the electric motor acting as a perfect elastic brake and saving a large amount of wear on the brake-shoes. When the engine is lightly loaded and charging takes place, the efficiency of the engine is increased due to the heavier load, which should nearly make up for the loss of transformation, especially when one considers that with the sliding gear there is a loss of from five to ten per cent. on all of the indirect speeds. While with the direct motor connection taking grades without changing gears the engine runs at a much slower speed and thus saves the gasoline, besides wear and tear on the engine.

ALLING PARKHURST:—The electric transmission system we have developed consists of a compound-wound generator directly coupled to the gas engine, generally through a flexible coupling of the best design, a controller and one or two motors of the regular automobile storage battery type. The generator is wound for about 125 volts at normal engine speed, and the electric motors are capable of taking that voltage. The whole system is made as simple as possible from operating and maintenance standpoints. For instance, we have a simple two-speed controller. The first speed, with double-motor drive, throws the motors in series across the generator. The second speed throws the motors in parallel, so that they get the full generator voltage. It is possible with some of the latest designs of slow-speed long-stroke gas engines to put the controller in either the first or second notch and (when operating with a foot throttle) have the foot throttle open normally so as to let enough gas into the engine to start it and at the same time not let the generator generate enough current to move the truck. In a recent test made with the engine turning about two hundred revolutions, the generator voltage was about two,

Digitized by Google

which was more or less consumed by the wiring of the truck itself. Then, when the engine was brought to its normal speed, the generator gradually built up to 125 volts, the truck speed increasing correspondingly. You have simply a variable voltage proposition, the power increasing according to the voltage. It is purely a straight gasoline truck with an electric transmission, you might say. There are no clutches, no sliding gears. The controller has a single reverse point, sending the current into the motors in the reverse direction, with the double-motor drive putting the current through the motors in series.

We have developed a controller for use where we have single-motor drive. Some people are using the single motor with a worm drive. In that case we get the two speeds forward by putting the fields of the motor first in series for the first speed and then in parallel with full generator voltage for the second speed. The reverse speed is the same as the first speed forward, simply putting the current in a reverse direction through the motor.

The American La France Fire Apparatus Company have developed an aerial ladder truck, with very long wheelbase, and are using at present a four-motor drive, one motor for each wheel. The speeds are obtained by combinations of these motors in series or series-parallel. The American and British Manufacturing Company have developed a truck and also a line of fire apparatus on the same principle. A company here in New York City known as the Roland Gas Electric Vehicle Corporation, have had very marked success with this construction.

H. W. Slauson:—Is that system similar to the Couple Gear?

Alling Parkhurst:—The only real difference is in the method of control and the fact that the Couple Gear has a geared motor in each hub. It is a matter of drive. The generator is about the same, and of course the way it is coupled up is the same. There are a lot of special features in the generator for this work. For instance, our generator is designed with a compound winding, having substantially an interpole construction. With about three times normal load we try to keep the voltage constant. Of course the voltage will vary with the engine speed. That is the way the speed of the truck is varied.

M. R. Machol:—If you can change the speed of the car by simply changing the engine speed, why is it necessary to have two speeds?

Alling Parkhurst:—There are certain conditions, the same as in storage battery truck practice, where you strike, for instance, very heavy muddy "going" or snow or something of that kind, when you are obliged to get more torque on the rear wheels to pull out.

B. M. Beskow:—What is the efficiency?

Alling Parkhurst:—It is pretty hard to say just what it is. In fact I have no data on that at all.

M. R. Machol:—Would the efficiency be very high when you get a high torque?

Alling Parkhurst:—Of course the efficiency would be high with a high torque. When the motors are running in series the efficiency falls

Digitized by Google

off on the motors, the same as it does in a storage battery truck. You run, for instance, on the intermediate notches with the straight storage battery trucks. With one with a four-speed controller, for example (with single-motor drive), you put the fields in series with resistance for the first-speed point. Generally the second step is either shunting the series fields or cutting out the resistance. The third step may be shunting the fields, with the fields in series-parallel for the last step. When you run the motor with the fields in series (straight series connection), you are running, of course, at a much less efficient point than with the fields in the series-parallel position.

C. M. MANLY:—The efficiency would drop considerably, would it not, with the engine running at half speed?

ALLING PARKHURST:—Of course, running at lower speed you do not get the efficiency that you do at high speed. That is true of any apparatus. You do not get the efficiency out of the gas motor running at low speed.

JOHN R. CAUTLEY:—Is there any difficulty in starting, using the generator as an electric starter for the engine?

ALLING PARKHURST:—We have not developed anything along that line more than experimental so far. But it is very feasible. For instance, I have in mind a truck of three and a half tons capacity. We are using a 7½ killowatt generator with two motors. That generator is wound for 125 volts, with fields compounded. A battery that will run about 30 volts, with fifteen lead cells or about twenty-five Edison cells, will be just about sufficient to crank the gas motor.

C. M. MANLY:—That would bring it into the pleasure car field.

ALLING PARKHURST:—Yes.

M. R. MACHOL:—Suppose you wanted to start a truck like that in very heavy going; you would start the motors in series, would you not?

ALLING PARKHURST:—Yes. That would be the ideal way to get the maximum power out of it. You can put the motors in parallel and get the maximum power out of the truck to the extent of the gas motor. It is a very flexible proposition.

M. R. MACHOL:—Assume a case where you had to climb a very steep long hill, and in order to go at two miles an hour you would have to develop the maximum horsepower of the gasoline motor; would you climb that hill in series or in parallel?

ALLING PARKHURST:—In a severe case like that I think I would climb in series. It is really a question of the gas motor horsepower output. If you leave the motors in parallel, probably, if you struck a condition like that, such rough "going" that you dropped down to about two miles an hour, the only thing that would happen would be to "stall" the gas motor. If you put the motors in series, you get half voltage on each motor and full current, which, of course, gives you the maximum tractive effort.

A MEMBER:—What is the ratio of the torque of those two motors when they are in series and when they are in parallel?

Digitized by Google

ALLING PARKHURST:—In the series position the full amperage from the generator goes through both motors, and the torque is doubled.

FIFTH AVENUE BUSES

PROF. W. C. MARSHALL:—How does the Fifth Avenue Bus Company find that this electric transmission compares with the mechanical? There is a case of buses running under the same conditions exactly, some of which are running electrically.

R. McA. LLOYD:—I think we have a pretty big subject and that it is impossible to cover it all. There is not any doubt in my mind that there are special fields for the application of the electric transmission. I think that it was desired more ten years ago than it is now, because people used to be afraid of sliding gears. Now everybody is used to them and there is less demand for the electric transmission in the case of the ordinary pleasure vehicle.

There are inherent reasons why the electric transmission cannot be a success as so far applied. It is never big enough to transmit the power that you can get out of the engine. The transmission described by Mr. Parkhurst is undoubtedly about the same thing as that on the Fifth Avenue stages. In the system applied to some of these buses there is a 35-horsepower engine, a 7-kilowatt generator and two 3-horsepower electric motors. The best you can get out of the two motors is 18 horsepower when they are slowed down to a bus speed of about two miles an hour, at which time the engine develops 35 horsepower. If they put in a motor big enough and generators big enough to chase the straight mechanical transmission over the streets, the weight and cost of construction would be prohibitive. The system can be used only in places where you do not object to going slowly on hills. It has been for that reason more or less cut out of calculations on commercial vehicles, excepting where it is difficult to get in a mechanical transmission. There is no particular advantage in an electric transmission, it seems to me. A good many men would rather run a gas car with a mechanical transmission than an electric car with an electric control. The beauty of the electric transmission is that the motors respond to the demands upon them; when you strike a steep hill they do not stop going. On the other hand, you are converting all the mechanical energy into electrical energy, with some loss, and back into mechanical, with some more loss, and are bound to get greater consumption of gasoline over a long period. The Fifth Avenue Bus Company gas-electric buses consume twenty-five per cent. more gasoline in the long run than those with ordinary gear-box.

If you look over the field you will find there are forty or fifty systems, and more coming out every day, particularly abroad, where they drive direct part of the time. Something can be said in favor of the addition of a small storage battery to help on hills. This can be charged going downhill. Here there is the disadvantage of additional weight.

I do not mean to say that I have exhausted the field, but I have cer-

Digitized by Google

tainly investigated most of the systems that are known. I think all have inherent disadvantages in the way of cost construction and inefficiency, and that the only thing they offer is the possibility of a little easier control, which I do not think is necessary, and certainly is not in as great demand as it was ten years ago.

M. R. MACHOL:—The hydraulic transmission with a gasoline engine will enable you to get on the rear wheels any torque from zero up to maximum, regardless of the speed of the gasoline engine. That is, as long as the gasoline engine is running fast enough to overcome its own internal friction, and give any appreciable power at all, the hydraulic transmission will enable you to get any drawbar pull that you happen to want. In climbing a hill it is not a question of horsepower; you can get up any hill that the motor is capable of climbing if you have only two cylinders going; on five or six horsepower you can climb the steepest hill the truck is capable of climbing at any time. At the same time you still have the absolute range of horsepower. I think that is an advantage.

W. P. KENNEDY:—What Mr. Lloyd says merely expresses the opinion that the electric transmission equipment is very much more expensive than the mechanical transmission. Yet when we consider the commercial or manufacturing side, it must be recognized that when a device is put out in experimental quantities, as is the case with these Fifth Avenue gas-electric stages, the price of such equipment is bound naturally to be very much higher than if it were the product of a very large factory making a great quantity of machines.

We have heard that the operating cost is very much higher than with the mechanical transmission in the consumption of gasoline. My information may not be correct, but I am of the impression that when the Fifth Avenue Coach Company undertook to place these electric transmission buses on Fifth Avenue they were prompted to do so by the existing high cost of mechanical transmission upkeep, and that when these electric transmission buses went into service their cost of upkeep was remarkably low. Therefore it would seem rational that even though the gasoline consumption were higher than with the straight mechanical transmission bus, if the cost of that increased consumption were not so high as to compare unfavorably with the cost of mechanical transmission maintenance, this ought to be given due weight.

We also have, aside from the Fifth Avenue bus application, considerable evidence of the practicability or utility of this type of device in the Coupled Gear gasoline-electric machine. Of course that is a motor truck or tractor, and it is not expected to go very fast. In the majority of cases which I have been able to investigate, the service rendered has been very satisfactory. I know of one case where a machine having a gasoline-electric transmission did work in moving heavy weights that never could have been moved with any other form except perhaps the hydraulic transmission. An engineering contractor who wanted to transport structural material and equipment from a railroad station over a nine-mile course to a point where he was constructing a hydro-electric power plant, used

Digitized by Google

successfully a Couple Gear gasoline-electric tractor. He told me that he never missed a single trip in his schedule of operation, and was able with this machine on one occasion to transport something like fifteen tons with the use of a trailer, up a 13 per cent. grade.

Do we not condemn the gasoline-electric type of machine for engineering or theoretical considerations rather than practical, for instance, by laying stress, as pointed out, on the gasoline consumption or some minor consideration without reference to its economy or practicability as a whole? I would like to have Mr. Lloyd's expression on that with reference to the Fifth Avenue bus case.

R. McA. Lloyd:—I know that the gasoline-electric-transmission buses cost several hundred dollars more than those with mechanical transmission. I do not say it is impossible to reduce the cost. In the meantime, the cost of mechanical transmission has gone down enormously and the cost of the electric dynamo and motor has not gone down very much.

HAMMER BLOW ON ENGINE BEARINGS

J. L. Breese, Jr.:—Mr. Lloyd laid stress on the upkeep of the transmission. As a matter of fact the upkeep which the electric transmission saves is not the upkeep of the transmission itself, but the upkeep of the motor. To illustrate, about four years ago Mr. Anglada and I constructed a combination trailer and tractor. We used a short-wheelbase Kelly truck for the tractor and expected to do wonders with this vehicle carrying ten tons by means of a three-ton truck. And we did do wonders. When coupled up the trailer weighed five tons and we put ten tons of coal in it. We demonstrated for one of the coal companies here in the city. Our record for one day was 100 tons of coal. Since then this has probably been beaten, but at that time it stood as a record. The coal company we were operating for thought we had something fine. We had for about the first week we were running, but after that we found that the engine bearings began to go. We could not account for it. We put the best driver we had on the job, kept the base full of oil, got arrested once or twice for smoking, but nothing would relieve the bearing trouble. Motor after motor ran bearings out in very short time. In a month's demonstration we put in two different motors, alternating them each week. At the end of a month's demonstration the coal company were so enthusiastic that they wanted our price on five jobs. Of course we were not in a position to manufacture them, for we knew only too well there was something radically wrong with the system.

After that experience I took the trouble to look into the matter a little further. I investigated the Couple Gear and tried to find out what troubles, if any, they had. I found that they had no engine troubles to speak of. The important point to note is that our system of trailer and tractor was precisely the same as that of the Couple Gear, except that we used a mechanical transmission, while they used an electric transmission. They had no bearing trouble while we had a great deal.

During the past year I have made some further experiments along the

Digitized by Google

same lines. All of you have probably heard of the Yellow Pine Company, who operate trailers for the transportation of long lengths of timber. These trailers have two wheels mounted on a fifth wheel or turntable which supports a bolster on which the timber is carried. At first they merely placed two wheels in the rear to support the overhang of the long timbers and used no drawbar. On taking a curve the wheels would bind and skid, so they resorted to a turntable in the rear and a sort of flexible bolster on the tractor. This bolster has an interesting construction. It is a small sector of a thrust bearing with a radius of twelve to fourteen feet; the races being cut from hard wood and the balls used six-inch bowling balls. This bolster had a play of about three-quarters of an inch forward and back and also laterally. This gave enough swing to the load that when a turn was taken there was no binding. Curiously enough the chief part that these balls were to play did not become evident for some time after the device had been in operation. After several months' use when they looked for bearing trouble in the natural course of events. they found to their astonishment that the bearings were in fine condition. It was also noticed that the gasoline consumption had decreased since the introduction of the ball race.

I mention the experience of the Yellow Pine Company because the point I wish to make is that the function of the electric transmission in its bearing on the upkeep of the engine, is precisely the same function as that of the ball race just described. I expain this in this way: It is easy to understand that when you have a combination tractor and trailer and the trailer is carrying the total load, its mass is probably two or three times that of the tractor. Every inequality of the road surface over which the trailer wheels pass, either retards or accelerates this mass, and a consequent retardation or acceleration is transmitted to the source of power. If we have a mechanical transmission a direct hammer blow is transmitted to the engine bearings. If, however, we have an electric transmission we still have the rapid changes of intertia, but they are dampened before they reach the engine bearings. The Yellow Pine people obtain this same end by the use of the ball race, absorbing the inertia change effects of the trailer before they reach the tractor wheels. Experiments have shown that either way is successful. Therefore I believe that the point I have made is at least worthy of consideration as distinctly in favor of the electric transmission.

ALLING PARKHURST:—I listened with considerable interest to what Mr. Kennedy and Mr. Lloyd had to say about the Fifth Avenue Coach Company's experience. The original generator that was built some years ago, had simply a bearing on the outside end. The engine bearing supported the other end of the generator shaft. In other words, the generator itself had only one bearing. The driving motors in the buses were of the plain-bearing type. Since those days of the plain-bearing motor, as you all probably know, all electrical automobile motors as well as the generators have had annular ball bearings. This has, of course, made a big difference.

Digitized by Google

M. R. MACHOL:—I was very much interested in what Mr. Kennedy said about a fifteen-ton load on a trailer going up a 13 per cent, grade, in connection with the use of a Couple Gear truck. Mr. Buckwalter at the last national meeting of the Society stated that he had measured the tractive effort of this truck and was unable to get 10,000 pounds tractive effort. I believe there is not a truck built excepting the truck that the Pennsylvania Railroad built, that will develop a tractive effort of over 10,000 pounds. I believe that will develop a tractive effort of over 20,000 pounds.

In connection with the question of remedying the hammer blow on the bearings of the engine, our experience with the hydraulic transmission has been that we do not have that trouble in the bearings, doing the same work. We have hauled some rather heavy trailer loads long distances with it. It is also a question whether some of the hammer blow is not due to the starting and changing speeds. If we have a semi-trailer with a load of ten or twelve tons on it, and have to start on a hill, with the ordinary type of transmission, there must be a considerable blow on the bearings, I imagine, when the clutch is dropped in and the load is jerked into motion.

DAVID BEECROFT:—We have heard from two truck concerns who have difficulty with mechanical transmissions operating in the South. Some of these trucks are operating on plantations in Louisiana; others have been in construction work on the Mississippi. The difficulty they have had is that when they get into first speed, it is impossible in many cases to give the truck enough momentum to carry it forward when changing, so that it is equivalent to starting on second speed. There is not sufficient flexibility and quickness in the mechanical shifting. They are looking to the electrical transmission to overcome that difficulty.

I have had a little practical experience driving a car with electrical transmission. I refer to a car equipped with the Entz system, with which you are familiar. It is a motor-generator combination without a battery, the only battery carried being one normal starting battery. I tried that car on various hills and in other places, and could not note any difference in its performance as to ability to climb hills and start on the middle of hills and accelerate, from what I have noticed on other cars with the same motor fitted with mechanical gearset.

So far as the gasoline consumption of the car is concerned, I can only take it from those who have driven it several hundred miles through the State of Michigan and part of Ohio, that they have been able to get the same number of miles per gallon of fuel with the electric system as with the mechanical system in the same sort of car and using the same motor.

C. M. MANLY:—I would like to ask if Mr. Beecroft can give us any data on the torque at low speeds as compared with that at high speeds. In the drawings of the machine at the time of the last automobile show a gear-box was shown. I do not know why the gear-box was put in unless to multiply the torque at the lower speeds.

Digitized by Google

A. C. WOODBURY:—I think that in the Entz system theoretically you can get three times the torque; not practically, because of the loss in transformation. The generator member runs at a speed which is practically the difference between the engine speed and the propeller-shaft speed. If the reduction is 3 to 1 that would be two-thirds the engine speed. The windings in the motor are such that it can double the torque. You get the torque of the engine directly on the shaft, the generator acting as a clutch, and then twice that torque added by the electric motor.

A MEMBER:—Running at high speed current is not generated in the generator as such, the generator acting as an electric clutch. The fact that most of the running of gasoline machines is on the high gear, would account for the gasoline efficiency being high.

R. McA. LLOYD:—The criticisms I made do not apply to all systems of electric transmission as some of them include direct drive most of the time and the electric apparatus is merely an aid to the control. Some of these systems operate very well, but I think they are more complicated and expensive than the common mechanical transmission system. The electric transmission when considered simply as a method of control does not seem to me to possess very great advantages.

PIONEER SYSTEMS

L. G. NILSON:—My experience dates back about sixteen or seventeen years. In the pioneer days we experienced, of course, a great many troubles which are easily overcome to-day. At the same time I think we did not begin to have as many troubles as the straight gasoline people of the same period. There is something about the gas-electric system which makes it very flexible and easily controlled. And although the efficiency, counting the combined efficiency of the generator and the motor, is comparatively low, it is to a certain extent compensated for by the better performance of the engine. We all know the weakness of the gas engine; unless it is allowed to run at a reasonably high speed we get poor efficiency. With the gas-electric transmission it is perfectly feasible to run the engine at practically any speed you like. My opinion is that the success of the gas-electric transmission as applied to vehicles depends largely upon the proper proportion or proper selection of the different parts that constitute the system; whether you use the storage battery or not, it is quite important that the engine, generator and motor or motors should be not only proportioned to each other, but that the proportions be right for the work to be done.

One mistake often made in electric drives is trying to run the vehicle too fast. What I mean is this: an electric motor runs most economically at a certain speed, and should not be treated like a mechanical apparatus having an unlimited amount of power back of it. Some people think that in order to get more speed the vehicle should be geared higher, but in case of the electric it very often works the other way. By putting in a greater reduction and allowing the motor to run faster, we (under certain

Digitized by Google

conditions) get a greater speed out of the car on account of the higher motor efficiency.

CLASSIFICATION NECESSARY

So many different schemes have been proposed and tried that I think we should have some sort of a grouping or classification of the different systems in order to study them intelligently. They all have some virtues and all some faults. But I believe that we will hear more about the electric transmission in the future. It is possible that if we classify and properly study each system, a designer can pick out certain features for new combinations and get good results.

As for the battery, the great trouble in the early days especially used to be that the owner did not realize the importance of proper care; the driver would not take enough interest in the car to learn to handle it properly. For instance, if an ignition wire fell off or the gasoline gave out, or for any other reason the engine failed, instead of thinking over what to do or trying to fix matters up, he would just go ahead and pull on the battery until it was dead, and then finally call for help. In the meantime the battery would probably have recuperated enough that when the right man came the engine could be started.

The Fischer system consisted of a gasoline engine to which was rigidly connected a shunt-wound generator. The main leads ran to a controller of the series-parallel type. Two motors were always used, one geared up for each rear wheel. A storage battery was placed across (floating on) the line. There were, of course, proper switches and instruments for starting the engine by converting the generator into a motor temporarily. We also had automatic control to keep the batteries from overcharging.

From my experience I do not hesitate to say that the gasoline-electric transmission has its proper place in heavy units. I believe there is very little excuse for it in units of less than three-ton capacity, except possibly with some of the systems which are more or less mechanical, like the Entz or that of Pieper, of Liege, Belgium, which was really first brought out in this country by Charles Munson, of Indiana, in about 1898.

P. K. HEXTER:—One of the greatest difficulties I found in the mechanically-driven car was the cost of upkeep, due to the inexperience of the man we had to drive it. This was in the taxicab business. I started to look for something that would eliminate the human element more or less. I investigated the Fifth Avenue gasoline-electric buses. I found the company had fifteen buses, seven years old, running. They are still running every day in the week. The trouble they had was due entirely to the way the buses were designed, not to electrical troubles. The same identical electric equipment is in there today that was in the buses when they were first put out. The trouble was due to the gas engines, springs and steering gears employed, some of which have been replaced entirely by new units.

Gas-electrics have been in use for five years as five-ton trucks for the United States Express Company in Chicago. They have been most successful.

Digitized by Google

Relative to the upkeep of the gas-electric, as far as gasoline consumption goes I will concede that if you take a straight mechanically-driven car and a gas-electric car and put them on a level road, where the former can run on direct drive and conditions are ideal, you will find an economy of gas consumption in favor of the mechanical drive. But this does not hold good in practice. In tests we have made using the same identical motor that the mechanically-driven has used, we have shown a better gas consumption than the mechanical drive has shown. The main saving, however, with the gas-electric is in the upkeep of the transmission. Taking the ordinary mechanically-driven car and figuring out the item grease alone, I know that in the case of a car I used to sell and handle instructions were given to the customers to fill the transmission case every month with grease. It used to take thirty pounds of grease to fill it. When you follow that up with the other items of expense and compare them with the case of the electric transmission that does not have to be filled more than once a year, there is a saving more than offsetting any disadvantages in gasoline consumption.

Design of the gas-electric and certain things installed have brought down the gasoline consumption considerably. We made a thirteen-day run in this city, eighty-four miles a day, with an average load of four tons, the truck making eight scheduled stops to the mile. During the time we had some of the severest weather. We never had to stop for any mechanical or electrical trouble. I have some figures here which are authentic:

City	*Type of bus*	*Cost per bus per mile for operation and maintenance*
New York	Gasoline	41.298
Paris	Gasoline	21.66
London	Gasoline	17.
London	Steam	16.6
London	Gas-electric	14.264

The London General Omnibus Company are operating a number of Tillings-Stevens gas-electric buses; I believe the number is about 260. The Tillings-Stevens people guarantee a tire mileage on their buses of 14,000. It is impossible to start the bus off with a jerk.

The main feature in favor of the gas-electric from a practical standpoint is ease of operation. The truck can be handled and moved at the rate of one-sixteenth of a mile an hour, without any jerk whatever. A speed of ten miles per hour can be obtained within ten seconds. We have another factor of safety, that of hill climbing, or rather going downhill. With an ordinary truck going downhill it is necessary to apply the brakes; on a steep hill, such as that at Englewood or Fort George, it is necessary to apply both the service and emergency brakes. With the gas-electric construction we can take the truck down a hill without any brake at all. In

Digitized by Google

fact a man can get off the truck and practically lead the car down the hill, by just putting a hand on the steering gear and guiding it.

R. McA. Lloyd:—You refer to the fact that the Fifth Avenue buses were badly designed, that that was the cause of the bad results. The Fifth Avenue stage company knew all about that; in seven years they have had time to find out what the matter was. If, in spite of the bad chassis design, they had satisfied themselves that the gasoline-electric transmission is all right, they probably would be going further with it. They had one that was not a bad design, a DeDion bus in which they substituted a single electric motor for the transmission and added a generator to the engine; that bus was a fair illustration of what could be done. I think the whole trouble was that the bus did not have the animation the mechanically-driven buses had. Neither the men who drove the buses nor the people who rode in them liked them. I think they will never get any more of that type than they have at the present time.

GOVERNORS

A. J. Slade:—Now that we have heard all the good things that Mr. Hexter has told us about his gasoline-electric transmission, may I suggest one or two improvements that some of the gas-electric people might make? First of all, we realize that the commercial vehicle has to be simplified in every way possible. On some trucks that are built we have eliminated the commutator; that is one thing. On other trucks we have eliminated the spark advance and retard; that is another thing. We still have the governors; any truck motor that has to stand up in service year in and year out must have a speed governor to restrain it from racing. Now this General Electric system of gas-electric transmission, so far as I know, has no provision to prevent the motor being raced. Possibly there might be some way of working that out in an electrical fashion in connection with the generator, so as to prevent the gas engine running at an excessively high rate of speed, or at any rate to prevent running economically at a high rate of speed; in other words, making it disadvantageous for the driver to race the engine. This is a very important point; not only when the engine is pulling but also when going downhill or coasting or running light, and is an improvement that I think ought to be incorporated. Whether it can be remains for electric transmission designers to determine.

P. K. Hexter:—We are driving our engine without a governor. The speed of the engine is 1,100; it will not go beyond that.

Alling Parkhurst:—It is purely a case of running the engine up to a certain point at which it will stall. The electrical apparatus is designed for normal running torque and speed at the normal speed of the gas motor. If you try to race the engine with the gasoline-electric the torque will go up so much and either stall the gas motor or draw it down automatically. Racing, it strikes me, happens more with an engine having a clutch connected with it. I think you cannot race an engine with the gasoline-electric system, unless you put the controller in neutral.

Digitized by Google

CHAIRMAN ANGLADA:—Can you do it on a down-grade?

ALLING PARKHURST:—Yes. If you race it, you would, of course, go at a terrific rate of speed at the same time.

H. E. DEY:—In the Fisher system that is easily overcome by holding the generator down from going beyond a certain speed, I think.

BATTERY OVERCHARGING

CHAIRMAN ANGLADA:—Would you not be apt to overcharge the battery or charge it at too high a rate?

H. E. DEY:—No, because the engine would not have the torque to produce more than so many amperes. As soon as you get up to a certain number of amperes, the generator would keep the engine from going any higher.

L. G. NILSON:—In reference to what Mr. Dey says, I know it is absolutely necessary to have some means of keeping the battery from overcharging; one cannot afford to put in a battery large enough to take the full output of the generator, but that does not complicate matters much; the matter can be covered by some sort of differential winding, or mechanically. Also a regulator can be made, working on the Watt principle, governed by battery voltage and the amperes taken by the motors. I think we will probably see more of this in the future. The present tendency of using electric starters invites the inventor back to the electric transmission.

C. M. MANLY:—Is the Hexter system the same as the General Electric system?

P. K. HEXTER:—The system is the same one that Mr. Parkhurst describes.

C. M. MANLY:—There is no battery on the line?

P. K. HEXTER:—No.

EFFICIENCY

C. M. MANLY:—With the modern gas engine we get a pretty flat torque curve, at from say 800 to 1,200 revolutions. As I understand it, with this electric transmission, so long as no variation in speed is made through electric control, the torque is going to drop as the speed of the car drops, because the speed of the car is lowered by dropping the speed of the engine. That is, they drop the voltage of the generator and therefore do not get as many amperes through the electric motor, and consequently are not getting as high torque at low speeds, say at 800, as at 1,200; whereas with direct mechanical connection between the engine and the rear wheels they would be getting the same torque, practically, at 800 as at 1,200; and the horsepower would go up correspondingly with the speed due to the fact that the torque remains constant as the speed goes up. It seems to me that with the electric transmission, unless they get something corresponding to the mechanical connection to transmit that uniform torque they are losing one of the valuable features which has been incorporated in the later improved gas engines, that is, the flat torque curves.

ALLING PARKHURST:—Our automobile motors are designed with an

Digitized by Google

extremely flat torque curve. Taking the normal load, and then about two and a half times the normal load on the motor, the torque increase is about four and a half to one. In Mr. Hexter's truck the gas motor has a normal speed of about 900. If you start the engine it turns over somewhere between 150 and 200. The voltage is very low—about two volts show across the terminals of the generator. As you bring the engine up to a speed of 900 you get absolutely a continuous torque. The voltage increases and the amperage decreases.

C. M. MANLY:—Suppose you get 2,000 inch-pounds at 800 revolutions on the torque curve; and also 2,000 inch pounds at 1,200. Now obviously unless you change the electric connection in some way, you are either not going to use all of those 2,000 inch-pounds at 800 or it is going to take more than 2,000 inch-pounds to drive that generator at 1,200, because the voltage is going up, the electric motors are therefore going to receive more current, and it is going to take more power to produce the higher voltage and larger current at the electric motors.

CHAIRMAN ANGLADA:—Would not the speed of the electric motor increase practically in phase with the gasoline motor?

ALLING PARKHURST:—Yes, just about in accordance with the speed of the gasoline motor.

C. M. MANLY:—I am assuming no electric control. They say they do not change the electric control; they vary the car speed just by varying the speed of the engine. I can see how you do it just as soon as you change the fields. I am asking how it is done as long as the fields are left alone.

We have an engine that is producing 2,000 inch-pounds torque at 800 r.p.m., and it is not going to produce over 2,000 at 1,200. It will produce more horse-power, but not more torque. What I want to know is how to get the engine up to 1,200 r.p.m., since it can give no greater torque to furnish the greater amperage which the motors would take at the higher voltage which the higher speed of the engine would cause the generator to give. Or assuming that you can get up to 1,200 r.p.m., then it seems perfectly obvious that we were not able to use all the torque at 800 r.p.m. It seems to me that unless they vary their generator field, the system of driving does not enable them to always develop the full engine horsepower at whatever car speed it may be required. It seems to me it is a great loss of the possibilities of the electric system to attempt to use it without utilizing the valuable features of the variable field strength of the generator.

ALLING PARKHURST:—The gas engine we are talking about is an engine of about 4½-inch bore and 4½-inch stroke, with a normal speed of 900 r.p.m. The maximum torque is at a speed of about 600 r.p.m. Of course, as you increase the speed you increase the voltage, as you increase the voltage you increase the amperes, up to the engine output, and if you increase the amperes you get greater ampere turns. You therefore increase the torque.

CHAIRMAN ANGLADA:—Is the voltage of the generator proportional to its speed?

Digitized by Google

ALLING PARKHURST:—The motor is compounded. If the speed increases one hundred per cent., the voltage increases about one hundred per cent. The generator is laid out to maintain as nearly as possible a constant voltage for constant speeds. In other words, the voltage curve is very flat.

C. M. MANLY:—What happens to the engine at variable speeds? Does the voltage go up?

ALLING PARKHURST:—Yes, but not in exactly the same proportion.

C. M. MANLY:—Does it go up as fast as the speed goes up or a quarter as fast?

ALLING PARKHURST:—No, it remains very close to constant, but it varies a little.

C. M. MANLY:—The thing we usually desire in a car is to increase torque as we lose speed of the car. I understand that when the series motor slows down its torque goes up if there is a current supply amply large on which it can draw; that is thoroughly clear. The point I am trying to make is that this generator, with uncontrolled field strength, when it is driven by the engine at 600 r.p.m., generates a certain voltage. Now when it is driven at 900 I assume that it generates a higher voltage. If I am wrong in that, I am wrong in the whole thing. If the voltage does not go up with the speed, everything is clear. It was a new idea to me when I heard it said to-night that they are driving with practically no variation of any electric control between a wide range of car speeds, and it immediately brought the idea to my mind that they must be operating very inefficiently at the lower engine speeds, because naturally if I had an engine running slowly and I wanted to get the full power out of it, I would increase the field strength of the generator so as to build up the amperes; whereas, if I were going to run at a higher speed I would decrease the field strength, because I would not need that much field strength in order to use the full capacity of the engine in driving the electric generator. When you have to lose speed in a car you usually want to increase the torque, unless you are going on easier roads; and the question was as to the way to get that increased amperage out of the generator, so as to furnish increased torque in the motor. It has to be got out of the generator.

CHAIRMAN ANGLADA:—I think the way to answer these questions is to have some one familiar with the designs, prepare a paper and give us the actual characteristics of the generator and motors.

Digitized by Google

THE IDEAL CAR

In opening the discussion, Chairman Anglada said that it was his idea to arrive at the specifications of a compromise Metropolitan Section car. "Let us put ourselves in the position of wealthy men," he said, "who have engineering instincts and want to build a car to suit our particular tastes. What kind of a car would we build?"

W. M. POWER:—I would suggest a small, high-efficiency, six-cylinder car; small bore, long stroke, with unit transmission. I would keep the weight down to the lowest possible limit consistent with safety. There would be no electric lights and no starter—nothing of that kind. The car would have wire wheels, and I think right-hand drive, with the ordinary controls, and single dry-plate clutch.

H. G. MCCOMB:—For my own personal use I would produce about the following: Six-cylinder engine of 3-inch bore and 5-inch stroke. I would not enclose the fly-wheel. I would have a very heavy, large fly-wheel, so that I would not have to be careful about stalling the motor in traffic. I would have a single-plate dry clutch; very long semi-elliptic front springs, three-quarter elliptic springs in the rear. A six-cylinder motor is the only one, in my opinion, that will give the greatest riding comfort. The wheelbase should be long for comfortable riding. The car should be kept as light as possible. It should have wire wheels, and as little "junk" on it as possible; perhaps a starter, because anything that adds to the convenience increases the value and usefulness of the car. The car would accommodate four passengers, with two extra seats to provide for a total of six persons.

L. P. PROSSEN:—I would probably take a taxicab and make it over into a runabout to suit me.

L. G. BUSBY:—Personally I would be in favor of a small four-cylinder motor, and do a great deal of gear-shifting. I do not believe in the present policy of trying to throttle down to two or three miles an hour on high-gear. To secure economy and light weight I would have a four-cylinder motor that would not throttle down on high gear, but would depend on manual gear-shifting. I have had no experience with the electrical gear-change mechanisms.

P. P. DEAN:—From my experience a four-cylinder motor is preferable for a light touring car. I have seen very good results from the valve-in-the-head engine. The car should have lighting and starting equipment, on account of the large number of women who use and run cars. I think the car should preferably be a roadster, with rumble seat, making a three-passenger body. It should have 32 x 4 demountable rims, and wood wheels. I believe in a unit powerplant, and from the experience I have had, a transmission with three speeds. I think electrical gear-shifts work better than mechanical. A weight of 2,000 to 2,200 pounds is all right, from the standpoint of economy. The car should travel 20 miles on one gallon of gasoline. A 30-horsepower motor seems to

Digitized by Google

cover the general demand for hill-climbing. In selling a car much depends upon its ability to take a reasonable grade without shifting gears. A 3¾″ x 4″ engine on a car weighing 2,000 pounds, properly designed, should take five passengers up a good hill at 20 miles an hour easily. I believe in gear-shifting, but the majority of purchasers do not understand it. I would have anything rather than a cone clutch, unless it were very well constructed.

W. H. Roberts:—I have not considered a car specially designed to suit me. The only cars I am interested in which would approach pleasure cars are those used by city officials. In the majority of cases such cars should be very light-weight and have enclosed body, to enable the occupants to spread out papers and maps without interference by the wind.

A. M. Wolf:—I would have a four-cylinder motor, L-head. It is desirable to have a passageway through the cylinder block from the carbureter to the inlet valves. The cylinders should be about 3½″ x 5″. The clutch should be either single or triple dry-plate. An interesting gear-box would be one put on the front end of the torque tube. One or two cars have been put out with this construction. The car should have bevel or helical bevel drive, and wire wheels. The body should be streamline, doing away with as many corners and small curves as possible It should have both battery and magneto ignition. A four-passenger body would suit me. Cantilever rear springs are ideal, I think.

F. C. Wulf:—I would have an electric motor starter and generator; four-cylinder engine, L-head; magneto and carbureter on one side and generator on the other; wire wheels, and a four-passenger body. The drive would be bevel gear; the control left-hand with center levers. Size of motor, 4¼″ x 5″.

J. E. Schipper:—I would have a 3″ x 6″ four-cylinder motor, four speeds, with fourth indirect, gear ratio, about 4 to 1, dry plate clutch, and wire wheels. I would like a body of the roadster type with two extra seats folding into the rear deck. The car would have worm drive, electric lights, dual ignition, cantilever rear springs, 34″ x 4″ wheels, and amidship gear-box on account of accessibility. The clutch would be arranged so it could be removed without disturbing the gear-box. All through the design of the car accessibility would play a large part in order to keep repair bills down to the minimum. In the average repair bill 60 per cent. of the charge is for taking down and putting together the parts. I would use hand-cranking until I see better work from batteries, which have to be renewed once a year on an average. Self-starting is, however, worth $40.00 a year when a car is used by a woman. I would have a small high-speed motor with at least 4-to-1 reduction in the rear axle. In the construction I would have feather-weight parts for all reciprocating elements. In order to have a motor of the size specified the parts would have to be light. There would be plain bearings on the crankshaft, unless I could find a good design of roller bearing that would be suitable.

A. C. Woodbury:—I would have rotary valves in the head of cylinders,

Digitized by Google

and multiple-plate dry clutch with asbestos facing. The latter is better than the cone clutch in my opinion. I think I would have the gear-box amidships. The size of the engine would be 3½" x 5" to 5½". The transmission would consist of two speeds and reverse, and a double-direct-drive rear axle, which I am surprised no one has mentioned. That would give four forward and two reverse speeds; the latter would be useful when a car has to be backed half a block or so. I would be in favor of pressed steel wheels having the external appearance of wood wheels, but slightly lighter, with demountable rims, cantilever rear springs and possibly one-quarter-elliptic front springs. There are several types of body that I would like to have. One that strikes me favorably is about the same as an ordinary two-passenger body with the seats set well back and a third seat beside the steering post, making a three-passenger body. Another attractive type of body is one similar to that called the suburban. It accommodates two passengers seated in front, and has a detachable rear seat, leaving a box-like compartment in the rear when the back seat is removed, which is useful for carrying luggage and for other purposes. The chief difficulty with this design of body is that it is exceedingly awkward to equip with a top; two tops, a short and a long one, being necessary. Possibly I would have simply a four-passenger stream-line body.

W. P. Kennedy:—My ideal is a light town car, a carriage more than a car. I would have a four-cylinder engine and the transmission combined with the engine in front, rather than on the rear axle, keeping the rear axle as free from weight as possible. I would have the car very well sprung, possibly putting supplemental springs under the power plant. If I could not get a body serviceable for summer and winter, I might have a very light interchangeable closed body for winter. I would have as many of the operating functions controlled by foot as possible. I would have a 3¾" x 4" engine, electric starter, electric lighting, and very low entrance to the body. I would have large tires and wood wheels.

E. J. Beuret:—I believe in a car capable of a maximum speed of about 50 miles an hour, and of throttling down to about 5 miles on direct drive. I favor the two-speed rear axle. I would not have the car too light, but something that would stand long, hard service. I believe in a copper water-jacket because it enables one to get uniform thickness of cylinder walls. I think that at the present time there is a dearth of medium-sized really high-grade cars. There is too much cry for light cars.

N. B. Pope:—My ideal car is primarily a two-passenger vehicle, rather low, with stream-line body, cantilever rear springs because of the reduced unsprung weight, and probably semi-elliptic front springs. The body would have a sloping deck in conformity with the stream-line practice, with a lid which could be raised, exposing two extra seats. For winter use I would have a body which would replace this, of coupé form seating three or four passengers. The second ideal in mind is absolutely simple control. The ideal method of control is merely a single lever; in the

Digitized by Google

control system used on the Pennsylvania railroad one lever controls both the power and the brakes. As I now see, there is only one way of accomplishing this, by the electric transmission. I favor the electric transmission for other reasons, principally because with that form of drive it is possible to run the motor continuously at its most efficient speed and to adapt the application of the power to the load either to permit of high torque or high speed as the load condition may require. To obviate the ever-present difficulty of excessive weight in electrical machinery, I would resort to high speed. The electric motor would be of the series form, naturally. In order to reduce weight in both the gas engine and the transmission, I would have a very high-speed gas motor, probably about 2¾" x 5", four-cylinder. It would turn about 3,000 r.p.m. I would have pressed metal wheels of the artillery form, because they satisfy the requirements of cleanliness and also the requirements of strength. The motor starter and electric-lights would be taken care of by the power plant.

HERBERT CHASE:—I agree with the ideas of Mr. Pope and Mr. Schipper in many particulars, except that I think neither of them wants a non-poppet valve motor. I would like a rotary valve motor provided one can be designed that will work dependably. This is ideal and not altogether realized at the present time. The size of the motor would be about 3¼" x 5" and have an A. L. A. M. rating of about 15, capable of developing in the neighborhood of 40 horsepower at 2,800 revolutions or thereabouts. It would certainly have four cylinders. There may be some excuse for a six-cylinder motor in a very large car, but not for the car I have in mind. I doubt if one person in ten riding blindfolded behind motors of equal power can tell whether a four- or six-cylinder motor is furnishing the power. I am unable to see the advantage of the two extra cylinders and I do see several drawbacks. The transmission would preferably be electric, providing the weight of the car could be kept below 2,000 pounds. The type of body would be very much like the ones Mr. Schipper and Mr. Pope spoke of, two seats normally with an extra seat opening in the rear to accommodate two extra passengers and to give space for luggage. The springs in front would probably be semi-elliptic, and cantilever in the rear, with either a shock absorber or some kind of secondary spring. I would prefer wire wheels, or perhaps pressed steel if the latter type had been developed sufficiently to assure practicability. I prefer demountable wheels, they being lighter and quicker to change than demountable rims and not so likely to rust. The gear ratio on a worm drive would be 4-to-1. If it is impossible to have an electric transmission I would have a gear-box which would be four-speed, direct probably on fourth. I do not see any reason why a car of this description should not easily make 30 miles straightaway running per gallon. For city work it ought to average 25 miles. I believe that a carbureter of good design with a single adjustment should be fitted, and be able to give a speed on high gear as low as 5 miles an hour and a maximum of 50 miles. The parts of the car should be as accessible as possible and the motor should be very well balanced to keep the vibration minimum.

Digitized by Google

I would like to ask Mr. Power and Mr. McComb their reasons for wanting six-cylinder engines of about 3½ inches bore in preference to four-cylinder motors of equal bore.

H. G. McComb:—Easy riding. I have found that in ordinary running I could not tell that the car had a motor in it due to absence of vibration. With a four-cylinder motor there is some speed at which vibration is noticed. In a pleasure car I think the motor should go about its business with as little annoyance to the passengers as possible, and for that reason I would be willing to spend the additional money to put in the two extra cylinders. Having no vibration at any speed means a great deal to a man who wants a car for pleasure. Wide variation of speed without shifting gears means wonderful flexibility. It is pleasant to be able to throttle a car down and feel that the motor is going as usual. I have never seen a four-cylinder motor that gave the feeling of comfort and pleasure that the six-cylinder motor gives.

W. M. Power:—I think it is a question of ultimate refinement. I think that probably eight cylinders would be better, but this would be going a good way as far as upkeep is concerned.

Herbert Chase:—Personally I have not been able to see that the six-cylinder motor has not as much vibration as the four-cylinder. The longer crankshaft and less rigid construction of the motor, due to the extra length, I have found (at least in block testing) makes the motor subject to more periodic vibration than the four-cylinder.

W. M. Power:—Is this due to poor construction?

Herbert Chase:—Possibly, but I know that at least two manufacturers of very high-grade six-cylinder cars in this country have had very serious trouble with vibration. One of the motors in question has a synchronous vibration at one speed which causes the power to fall off fully 30 per cent. from normal at that speed. It is difficult to get good distribution, particularly when the double exhaust is not provided.

Chairman Anglada:—I prefer an eight-cylinder V motor, with one camshaft, one source of ignition (magneto), fixed spark, a three-speed gear-box direct on second. The car would be able to do very nearly all traveling on second. I would have bevel-gear drive because manufacturers will sell worm-gear axles only with certain restrictions. I would have the foot-brake on the propeller-shaft. The body would be four-passenger with disappearing rear seats, V-type radiator and wire wheels with demountable rims. The dimensions of the motor would be probably 2¾" x 5", giving 42 to 45 horsepower. The motor would run very efficiently at very high speed, a maximum of perhaps 3,300 to 3,400 revolutions. I would have a single dry-plate clutch.

J. E. Schipper:—What do you think of the spiral bevel gear as a compromise?

Chairman Anglada:—I would prefer that to the bevel.

L. P. Prossen:—I think pump water circulation is far better. I have had experience with this type and with thermo-syphon. I think the radiator should have a flat front.

Digitized by Google

CHAIRMAN ANGLADA:—What have been your troubles with the thermo-syphon?

L. P. PROSSEN:—Overheating in summer and freezing in winter.

I want to explain a type of clutch that is very satisfactory. At each end of the cone there is a circular groove in which there is a round piece of rubber, similar to that on baby carriage wheels. The rubber is pressed into the leather, giving more smooth engagement. I have known this type to run as long as three years and not give any trouble at all. Even after the rubber breaks it can be removed and replaced without taking the clutch off the car. There is very little expense attached to it and it is very satisfactory.

CHAIRMAN ANGLADA:—From the standpoint of economy of manufacture or ease in replacement or ease of control does the disc clutch possess advantages over the single-plate dry clutch, or the single-plate and multiple-plate over the cone clutch?

W. M. POWER:—No doubt the cone clutch is cheaper.

HERBERT CHASE:—Three or four years ago Mr. Green, of the Fifth Avenue Coach Company, expressed himself as very much in favor of the cone clutch, but said he thought it should be made of a stamping, very light and flexible.

L. P. PROSSEN:—That is all very well, but those clutches jam and stick.

CHAIRMAN ANGLADA:—The cone clutch on the Locomobile racing car gave excellent satisfaction. It was one of the few clutches in the 1906 Vanderbilt Race that did not give any trouble.

L. P. PROSSEN:—What is the best type of thrust yoke for taking the thrust on release of the clutch?

W. M. POWER:—The old type of cup and cone or ball bearing.

L. P. PROSSEN:—That never gave very good satisfaction.

N. B. POPE:—I am impressed with the lack of enthusiasm here for front-wheel brakes.

J. E. SCHIPPER:—If a diagnoal brake could be installed it would be a good thing. The tendency of a person in a moment of panic is to throw on the brakes suddenly. The diagonal brake would be a good thing in a case like that.

CHAIRMAN ANGLADA:—Do you think complication and extra weight would be a hindrance?

J. E. SCHIPPER:—That, of course, is the objection.

N. B. POPE:—I must confess that diagonal brakes seem unsymmetrical, but other than that they appear to be satisfactory.

J. E. SCHIPPER:—The automobile is the only vehicle of its size with which reliance is placed on manual power to apply the brakes. Of course, there have been other kinds of brakes—air and electric. With air there has been the difficulty of keeping the tank tight, and with the electric brake there may be a lag in getting the power applied to the rear wheels unless everything is keyed up to the top notch. The time consumed in getting up the speed of the motor is really considerable

Digitized by Google

when you want to make an emergency stop, but I believe the time is approaching when the control of brakes will not be by hand.

It does not seem right that brakes should not have a longer life than they have at present. A brake used in a mountainous country has to be renewed every 400 or 500 miles to keep it in good shape. This condition would be improved if it could be run in oil.

N. B. POPE:—There are certain problems in automobile design which we can safely refer to railroad practice. In railroad practice there is no hesitancy about changing brake-shoes as often as necessary, and I see no reason why we should not acknowledge the fact that the friction we desire in the brake means wear. The thing to seek in brake design is the maximum amount of friction with a minimum amount of weight.

A. C. WOODBURY:—I have driven a car 12,000 miles in rough and very hilly country and renewed the brakes only twice.

H. G. MCCOMB:—I know of one concern advertising to guarantee all brakes for one year's service. It seems that this is based on experience.

HERBERT CHASE:—Would not the diagonal operation of brakes be rather hard on tires? I know there is considerable extra wear on one of the rear tires if one of the brakes is applied more quickly than the other.

O. A. PARKER:—I have driven 80,000 miles and renewed only three brake shoes. They are steel to steel.

CHAIRMAN ANGLADA:—Should the transmission have four speeds or three?

O. A. PARKER:—Four speeds with direct on third.

H. G. MCCOMB:—Three are all that are necessary. Keep the car as light as possible.

L. P. PROSSEN:—I do not see why the transmission should not be direct on high. If the transmission is properly designed you can use the high a great deal. We have four speeds direct on high, 4 to 1 gear. You can drive the car about 45 miles an hour and hardly hear the motor running.

CHAIRMAN ANGLADA:—With four speeds you can use a smaller motor It is questionable whether you prolong the life of the motor.

HERBERT CHASE:—I very much favor the small high-speed motor because you can keep the throttle nearly wide open and get much more efficient combustion, due to the higher compression.

J. E. SCHIPPER:—You get better carburetion, also.

CHAIRMAN ANGLADA:—Who has given the subject of leather universal joints as used in the Isotta and DeDion any consideration?

HERBERT CHASE:—I think that about the hardest service to which you can put a universal joint is between a motor and an electrical dynamometer, where there is a "give and take" between the flywheel and the armature. I have known a two-inch shaft to shear off without any apparent provocation. In one 300-hour test I found that when the test was over the joint had worn so much that there was a play of nearly one-eighth inch. In the next test we made for 300 hours or a little

Digitized by Google

over we used leather universal joints and there was absolutely no indication of any wear.

N. B. Pope:—I think that automobile designers almost as a rule are rather too much inclined to ignore the fact that there are two qualities to be considered—one independent and the other dependent. Take the case of the clutch. For one use the cone clutch is superior and for other uses the plate clutch is superior. You cannot determine which type is superior until you know what sort of car you are talking about. We have to guard ourselves very carefully in making up our minds on these various features and their relative importance. We should always take a certain type of car as the starting point. The thing that appeals to me in this connection is the number of speed-changes in the gear-box. If you plot the horsepower curve of the motor and the curve of tractive effort of the car in which you propose to put this motor, and then consider the sort of use to which you intend to put the car, you will find a safe combination. But if you follow one of these conditions without varying the other the conclusions may not be satisfactory.

Chairman Anglada:—I believe that an ideal set of characteristics should be possessed by any and every car irrespective of whether it is a touring car, a runabout or a roadster, characteristics which should apply to one car as well as another.

THE GENERAL TREND IN AMERICAN MOTOR DESIGN

By W. M. Power

(Member of the Society)

The question as to the lines of general development of American motors is becoming more and more vital. Our motors with few exceptions are characterized by large cylinders, the bore-stroke ratio, compression, piston speed and maximum output per pound being low, and fuel economy being almost neglected. Our shortcomings in the last-named respect are generally met by the argument that fuel is so comparatively cheap in this country that the matter is of minor importance. Granting that there is some reason in this argument, very little thought is required to realize that for two motor cars of given ability but wide difference in motor size and weight and co-related difference in weight of the complete car, the item of fuel economy is only one of a number making for low operative expense. As contrasted with the general practice here the European manufacturers, notably the British, have gone to what perhaps appears to us the other extreme, building motors having almost exactly opposite characteristics and getting power outputs which a very few years ago would have been considered impossible; this being coupled with a fuel economy beyond anything with which we are familiar.

Digitized by Google

These results have been attained by very large valves and ports, designed to give as smooth flow-lines as possible, high compression, and very high piston speeds, well above 3,000 feet. Such engines must be driven carefully if they are to give their maximum in service, piston speeds must be kept up only if a reasonably large power output is required, and the motor must never be allowed to run on wide-open throttle at low speeds. This means, of course, the gear-changing will be much more frequent, and that a change down will be required for any piece of bad road whether hilly or not.

Granting, however, that these requirements are complied with, the results are altogether gratifying. The motor, although sensitive, becomes for the man driving his own car, an intimate thing, a part of himself almost, willing and able to give good and long-continued service, and at an operating cost that is surprisingly low. In addition to care in driving one other thing is, however, absolutely necessary: Occasional adjustment and periodic overhaul must be carefully made. The ordinary methods of doing work which it is to be regretted are only too prevalent in the average garage repair shop will not do; a kick and a curse will not keep motors of the type under consideration in condition to operate satisfactorily.

Each of the types of motor has advantages peculiar to itself, from both manufacturing and operating standpoints, and the most comprehensive discussion of them possible is fully warranted. Given proper equipment in the shop the workmanship required in the case of the two types is about the same for really good construction, except that the light connecting-rods and pistons for the small motor, together with its lubrication system, will entail a slight additional expense. This is more than compensated for by the smaller amount of material required and the smaller parts to be handled. The final assembling and adjusting of the small motor cost more.

The probability is that the most suitable motor for service in this country is a compromise between the two types, designed to give well-sustained torque up to about 2,000 feet piston speed; and having for a five-passenger car about 4,000 to 4,500 c.c. displacement in the case of a four-cylinder motor and about 5,500 to 6,000 c.c. in the case of a six.

For the piston speed specified motors of about 6-inch stroke should have clear valve diameters of about 50 per cent. of the cylinder diameter, the lift being about ⅜ inch, and there being ample clearance between valve head and combustion chamber wall; the area of the annulus between valve head and pocket wall being one and one-third times the effective area of valve-opening. The combustion chamber should be about 25 per cent. of the swept volume of the cylinder. Straight-sided cams with mushroom or large-diameter roller tappets, with usual timing (i. e., exhaust opening about 45° to 48° before bottom to 10° after top center, with inlet opening 5° after top and closing 30° to 35° after bottom center, will be found sufficient.

Piston design should be carried to the last limit of lightness consistent

Digitized by Google

with safety; 90-mm. pistons of good gray iron, with three rings at the top and a scraper ring at the bottom, weighing 24 ounces, with rings but without wrist-pin, have stood up well. For 95-mm. diameter the weight will be about 28 to 29 ounces, and for 100 mm. 32 ounces will be found sufficient. It is essential that such pistons be cast with cores carefully made in metal boxes, and the arrangements for machining them should be such as to allow accurate setting up from the inside.

A ring arrangement which has been found very satisfactory and which lends itself to very light construction is as follows: A single broad groove about 3/16" to ¼" from the top of the piston is used, the depth being about 7 per cent. of the piston diameter. In this groove three rings are fitted, a broad concentric hammered ring filling the bottom half approximately when contracted. The ring is ground on the top and edges. Superposed on it are two narrow rings which side-by-side fill the balance of the groove. These twin rings are ground all over to conform to the cylinder and have no tension, dependence being placed on the broad bottom ring for keeping them in contact with the cylinder walls. The joints in the twin rings should be staggered, pins in the broad ring holding them in position. It has been found that with full forced lubrication it is impossible to make a motor fitted with these rings smoke, even after running for long periods with an almost closed throttle. The oil consumption ran well over 1,200 miles per gallon.

Pistons of the weight we are considering are so thin as to be very easily distorted and advantage of this can be taken to preclude the possibility of noise through side-slap. The piston can be machined to fit the cylinder except at a narrow relieved portion next the head. A second operation removes from .008 inch to .010 inch from the sides of the piston in line with the ends of the wrist-pin and for its entire length up to the relief next the head. This metal can be removed by a second grinding operation, the cut running out so as to leave a land in contact with the cylinder wall in line with the thrust of the connecting-rod and embracing about one-quarter of the piston circumference both front and rear. Such a piston when expanded by heat will be distorted so as to more nearly fill the cylinder. The pressure required for such distortion is, however, exceedingly light and the possibility of seizing and cutting entirely eliminated.

The second vital feature for high-speed motors is the connecting-rod which should be made either hollow, an expensive construction, or of a rather shallow I-section. The deep I-section is difficult to forge and it is still more difficult to keep the weight down owing to extra metal which must be allowed for draft in the dies. A reforging operation will remedy this to a large extent, but is again expensive and the dies are not durable using the quality of steel necessary, which should be good chrome nickel. The shallow I, on the other hand, can be made with reasonably thick flanges and thin web and very little extra section need be added for draft. Two well-fitted bolts of about ½ inch diameter and good material are sufficient and make for low cost and weight.

Digitized by Google

Rods should be carefully balanced both for big and top ends. Valves should be made with narrow seats and the stem and head joined with a large-radius fillet; ¾-inch is not too great. Springs must be heavy enough for sufficient acceleration to force the tappet to follow the cam profile at the proposed speed.

The lubrication system is perhaps of more importance than anything else as affecting durability, except light-weight reciprocating parts. A full forced system is probably the most satisfactory, with maximum pressures up to 25 pounds. Bearings should be made with not more than one circular oil groove, to which the lead from the pump is taken and with which the lead to the center of the crankshaft registers. Oil is carried to the crank-pins through drilled webs. Pins should be hollow with plugged ends, or better still, a piece of tube with outside diameter about ⅛ inch less than the bore of the pin can be inserted, the tube being expanded at each end to fit inside the pin at the ends only. Oil is led to the annular space, an oil-hole from it registering with a circular groove on the rod bearing.

Broadly, it seems that the moment the purchasing public realize that for given service with the average type of car being built in this country, they are paying altogether too much, there will be a very marked demand for the smaller and more economical machine.

DISCUSSION

CHAIRMAN ANGLADA:—Is the piston speed you refer to as well above 3,000 feet the maximum piston speed?

W. M. POWER:—The maximum piston speed is very much above 3,000, approaching nearly 4,000 feet. 3,000 feet refers to the speed at which the torque is well sustained.

F. R. PORTER:—We closed the inlet at 65° past bottom center. My experience has been that with a motor designed for 2,300 feet piston speed, and even with a motor of 2,900 piston speed we were held back considerably if we did not carry the inlet closing that far. Two years ago we carried it over 45 and then increased to 50 and finally to 65°. We find in practice that at extreme engine speeds the valves remain open even longer, because they jump.

W. M. POWER:—Valve timing, valve and port design and exhaust gas interference are all co-related. Their influence has to be balanced up. Wide variations are obtained in two men's experience, using motors of the same size. I have seen a six-cylinder, 4⅜ x 6¼ motor which showed a very consistent torque up to 2,000 feet with valves of a diameter less than half the cylinder diameter. But we were careful in that case to avoid exhaust interference, and the layout was very studiously made too. The six-cylinder 4⅜ x 6 gave 114 horsepower at 2,100.

F. R. PORTER:—Did you not have some valve jumping at the high engine speeds?

W. M. POWER:—The valves may have stayed open longer than the timing would indicate, but I think not.

Digitized by Google

CHAIRMAN ANGLADA:—I think Mr. Pope took up the matter of the manufacture of foreign-type engines versus American-type engines with some motor manufacturers some six months ago.

N. B. POPE:—I did look into the matter to a certain extent, chiefly because I was impressed with the argument that if you wish to increase the power of the motor you can do so by increasing the size of the motor or its speed. The European designers have chosen the latter alternative, which seems, broadly speaking, good economy. In order to secure that economy, however, they have to compel their users to learn to handle the motors very differently from what our users handle them here. It seems that the fact that the high-speed motor is very much more sensitive to the throttle than the low-speed and "sluggish" motor will probably constitute the principal objection to it in this country, with the second objection of higher cost to the manufacturer, due to the closer limits which are necessary, the more expensive design and possibly more expensive materials. One consulting engineer in Detroit wrote me plainly that so long as American automobile manufacturers are unwilling to pay more than $150 for their motors we will continue to have "sluggish" motors. He did not indicate that he had a particular preference for that type, but seemed to think that our manufacturers are not sufficiently alive to the value of the lighter, high-speed type, or else do not consider it commercially expedient. I think it would be interesting if we could get some opinions tonight on the question of what may be termed the economies of increasing motor speeds; because it is just a plain question of getting more horsepower for less metal if you can speed the motor up. It is only necessary to determine what you must pay to get that advantage and whether you can afford to pay it.

CHAIRMAN ANGLADA:—There is an enormously strong feeling throughout our entire country against gear-shifting. During the past five or six months a dozen or more engineers have told me that they hesitate to go to the high-speed light motor solely on this ground.

Mr. Power alluded to a very much mooted question, the number of big-end connecting-rod bolts.

W. M. POWER:—I have never seen a two-bolt construction give any trouble when properly fitted, put on with light parts. I have seen four-bolt construction give trouble when the bolts were too small, simply because the design was improper.

F. R. PORTER:—I have always used four bolts, the principal reason being that we found we could get a great deal lighter big-end with that construction.

W. M. POWER:—To maintain that lightness you have to build a great deal more expensive rod than with two bolts.

F. R. PORTER:—Yes.

W. M. POWER:—I believe that two bolts are entirely satisfactory.

N. B. POPE:—I would like to read into the record a short extract from the *Autocar* dealing with the weight of iron and pressed steel

Digitized by Google

pistons. The particular piston referred to is the Zephyr, which is made of pressed steel sections welded together. The weights given refer to well-known cars, and I will state them. The Ford piston regularly fitted in the engine—56 ounces; steel piston, 22⅛ ounces. Austin car, existing weight, 76½ ounces; steel piston, 37⅛ ounces. Fiat, existing weight, 34 ounces; steel piston 17 15/16 ounces. Talbot car, existing weight, 55½ ounces; steel piston 27⅜ ounces.

W. M. POWER:—The piston construction I spoke of, with the triple ring, that is, uniting the three rings in a single groove, eliminates a lot of metal which you usually get with three grooves. There is a lot of metal you cannot do away with in the usual construction. By combining the rings in a single groove, you get a lighter section and still get a very tight piston.

N. B. POPE:—That is, I assume, a very expensive piston to make?

W. M. POWER:—Yes, the ring is expensive to fit up.

M. R. MACHOL:—That same Ford piston of magnalium weighs 18 ounces; that is made from the same pattern as the iron piston.

HERBERT CHASE:—I would like to ask if Mr. Power advocates a five-degree overlap of the valves?

W. M. POWER:—Yes, provided there is no exhaust interference at all.

HERBERT CHASE:—That would require a double manifold on the six and possibly on the four, would it not?

W. M. POWER:—It should not on the four. It does on the six.

HERBERT CHASE:—With the double manifold on the six, do you advocate the same overlap as on the four, practically?

W. M. POWER:—Yes.

HERBERT CHASE:—Do you think that overlap would not interfere with the distribution, if the design were properly worked out?

W. M. POWER:—Yes.

CHAIRMAN ANGLADA:—Mr. Power contends that the full forced lubricating system is the most satisfactory, with maximum pressures up to twenty-five pounds. I would like to know whether he understands from experience that such a system is really warranted.

F. R. PORTER:—I have never had much experience with any of the full forced systems, because I have always used the splash and never have had any occasion to change. It has been perfectly satisfactory. We have used force for the main bearings, much higher than twenty-five pounds, as high as fifty. In most of the big motors we use a very large pump, with a capacity of three quarts a minute, with the idea of cooling the bearings. In tests we got pressures up nearly to 400 pounds; that is, when the bearings were new and fitted very tight. The pump is built for 600 pounds. What it worked at normally after the bearings became loosened up, I do not know. We use a scoop, taking the overflow from the main bearings on the crank arms, which throws it to the connecting-rod bearings, and we have never had any trouble.

CHAIRMAN ANGLADA:—Do you feed oil under pressure to the crank-pins?

Digitized by Google

F. R. PORTER:—No. only by centrifugal force. We had a motor under a seven-hour test, wide-open, and have never had any trouble.

HERBERT CHASE:—Mr. Chairman, I might say one or two words as to the lubrication of the Knight motor which was recently tested in the Club's laboratory. It had what I think may be termed a full forced lubricating system. There were no grooves in the bearings, that is no grooves running lengthwise of the bearings. The rods were hollow. I understand that when the motor was originally designed the oil was forced up through the hollow rod to the wrist pin bearings, but this resulted in the rod filling full of oil, so that its weight was very much increased. In the motor as run under the test, the hollow rod had been drilled with a one-eighth inch hole about three inches above the big-end center. Until that was done the motor had altogether too great a supply of oil on the wrist-pin end. It was found, however, that sufficient oil to give proper lubrication was forced up through the hollow rod, even with the one-eighth inch hole near the lower end, enough oil flowing through the hollow rod to the hollow wrist-pin and from the wrist-pin out through holes in the sleeve valves to the cylinder walls. The sleeves themselves were evidently lubricated to a sufficient extent.

CHAIRMAN ANGLADA:—Do you know what pressure was used in that system Mr. Chase.

HERBERT CHASE:—We made no test to determine the exact pressure, but my recollection is that Mr. Vandervoort, president and engineer of the company which built the motor, said that the pump originally gave a pressure of about forty pounds. This pressure was gradually cut down until it was found, I believe, that four or five pounds was sufficient.

W. M. POWER:—Was the oil-feed pressure reduced to decrease the smoke?

HERBERT CHASE:—Yes, the higher pressure fed altogether too much oil.

RACING AND ITS EFFECT ON MANUFACTURE

By FINLEY R. PORTER

(Member of the Society)

The topic, "Racing and Its Effect on Manufacturing," is one so subject to varying opinions that to define the difference between cause and effect in a manner to be convincing is somewhat of a task. I will endeavor, however, to present only such features as appear to be borne out by facts as I have seen them during four years of intimate connection with this branch of the art. The fact that the results obtained are so decisive and so easily affected by the human element, shows that a

Digitized by Google

clear understanding or true analysis of the different points at stake are, as a result, often misconstrued. Generally speaking, the results obtained, and the satisfaction in use, in practically every case, are the same for racing as touring, except they are had in a magnified form in the latter.

First, motor efficiency seems to have been in the early stages of the art subject to more attention than any other feature of road vehicles, due no doubt to its being the most radical departure from conventional practice known to the engineering world at the time. During the period between the early 80's and 1896, the development of the internal combustion engine seems to have been rather slow, when considered from an efficiency standpoint, while the forms of vehicles during this period changed considerably, developing as they did from the tricycle type to a substantial four-wheeled vehicle.

After this time road racing was considered very seriously, the first instance where competition seemed to develop to a very keen point occurring in 1896 just after the Act of the English Parliament that abolished the necessity of preceding a motor-propelled vehicle with a red flag. The first real race held in England was a non-stop run to Brighton, starting from London. The entry list was very large, including what was then the best effort of such men as Leon Bollee, Daimler, Levassor and Duryea (representing the United States). Following this event the necessity for greater power and general weight limitations seemed to be recognized by the leaders, with the result that the cars used for racing seemed to develop much more rapidly than pleasure cars. This was no doubt due to the fact that most of the purchasers were necessarily men of wealth and lovers of sport.

Up to, perhaps, 1903, there was no question that racing alone was responsible for the development of the automobile. From that period to, perhaps, 1906 or 1907, the energy of the leading automobile designers still seems to have been centered more largely on the development of the speed car, while the pleasure vehicle seemed to be a modification for use under less strenuous circumstances. From 1907 to the present time a great deal more attention has been paid to luxury than to speed, but at the same time the leading minds have continued to develop their theories and investigations by racing. Through all of this period the development of the motor has been the paramount issue, and all of the important results necessitated experiments beyond capabilities in ordinary touring uses. Since practically all of the real development in motor design has centered on the four-cycle motor, a number of types have been brought into favor, all with more or less success, current work becoming simply a question of perfection of details. The results obtained from each experiment conceived as a means of producing a machine to conquer, are, I believe, invariably introduced into the pleasure vehicle, resulting not only in betterment of the same, but in more advanced methods of manufacture. We can understand readily that while the advances made in manufacturing processes are not usually attributed to the effects of racing, they are most assuredly a direct result from it.

Digitized by Google

My personal experience has been along the lines of development of the conventional T-head motor. This, since the advent of the two-point high-tension ignition, seems to be capable of very nearly the same results as the valve-in-the-head motor, permitting one at the same time to keep within the bounds of stock possibilities, as accepted by the general public. While I am not a believer in stock contests, I have always accepted each new successful development as a means to further the ends of my stock production.

I have carried compression ratios as low as 19 per cent. of the total volume, giving a mean effective pressure of practically 100 pounds per square inch, with no signs of preignition. A much higher factor of safety is, however, needed in the strength of the cylinder heads, due to the constructional features involved in a T-head cylinder with large port areas. The surface presented in the combustion chamber is a very broad one, with not much chance of reinforcement by ribs or dome effect, which seems to result in a tendency to "weave" that eventually causes failure, due to a fatigue effect, apparently, rather than to inherent weakness of cylinder walls. My conclusions in this respect are borne out by the fact that the most strenuous tests fail to develop any initial weakness, yet after constant use fractures around the extreme top of the cylinder wall seem to occur quite frequently. This result, together with the fact that I have never carried a stress on a cylinder at this point above 5,000 pounds per square inch, while test bars from the cylinder material often give more than 34,000 pounds per square inch, seems to bear out my conclusion. Experiment as radical as this in the development of a stock motor would have seemed ridiculous three or four years ago, and only the urgent need of more power from the same cubical contents was incentive enough to try it, thus reaping the benefit probably two years sooner than would otherwise have been the case.

Light reciprocating parts also became a necessity, demanding the use of the highest class of material. In an effort to decrease the angularity of the connecting-rod, permitting the use of longer strokes without any greater loss in transmitting the explosive force to the crank-pins, very long connecting-rods became a necessity. I have used successfully chrome vanadium steel for these parts, stressed to 60,000 pounds per square inch. Moreover, steel pistons, turned to a thickness at the lower end of less than 1/16 inch have proven satisfactory in every respect. The two important factors mentioned are receiving a marked degree of attention from all designers, and while they are not in common use in stock production as yet, there is no doubt that within the next two years they will be accepted as necessities in the stock car. While I have never used the constructional features mentioned in reference to the cylinder shape in a stock car, I have found that the limits can be carried to the same extremes as in racing, without producing any ill effects in a stock car, the reasons being that in no instance does stock use demand such strenuous service, and owing to the fact that the carbureter is never held wide-open for any length of time, the volumetric efficiency must fall off and the explosive pressure consequently be very much diminished. The same theory holds good in ref-

Digitized by Google

erence to the lack of urgent need for such extremely high motor speeds, permitting the use, without any apparent falling off in power, of heavier reciprocating parts that might be resorted to purely as a means of reducing the cost. There is not a single thing, however, in the motor used in the car which won the Grand Prize race at Santa Monica in 1914, for example, considered from either a cost or extremes in construction standpoint, that I would hesitate to use on a stock job; the point being that such use is hardly demanded.

In the use of light reciprocating parts and high compression, the necessity of large port areas is obvious. While several different proportions of valve to cylinder diameter have been advanced as the proper method of determining valve sizes, my practice has been to keep the gas velocities as low as possible, consistent with good carburetion. Eight thousand feet a minute maximum has been arrived at as correct, but I have no figures or experimental results to prove that this is the limit, or the correct solution of such a seemingly important factor. The volumetric efficiency obtained, however, proves beyond doubt that this ratio is very good, if not the best. The maximum torque, in the case of the motor mentioned, was 285 pounds, and was carried as high as 2,250 r.p.m., while the maximum horsepower was reached at 2,350 r.p.m., the motor developing at that point 150 horsepower. The several attempts to increase motor efficiency have forced upon us a marvelous increase in piston speed, and positive results have been obtained that no doubt would never have entered the designer's mind when considering stock production.

As an important factor bearing on the matter of piston speed, valve timing has come in for a generous share of consideration, and while experiments along this line are comparatively easy, the wonderful results are demonstrated only by the fast-moving vehicle. This again comes back to the racing car for demonstration. Placing the opening of the exhaust as early as 70° ahead of center, and closing the inlet valve as late as 63° past lower center, with practically no attention paid to the closing of the exhaust and the opening of the intake, within reasonable limits, have been proven thoroughly practical and efficient, in stock production, as well as racing; and to racing alone I believe this development is due.

Chassis development followed motor development closely, being taken up earnestly as early as 1906 or 1907. The need, however, for anything radical was not pressing until within the last three or four years. The matter of straight-line drive, with a low center of gravity, was the first pressing need developed in racing, which has worked out wonderful results in stock practice.

The matter of power transmission to the rear axle, through the various forms in use, has reached a high state of development, and in the case of the shaft drive, so well adapted to all types of cars and now in such common use, owes its early development, I believe, entirely to racing.

The search for lightness, so essential for the unsprung parts of the chassis for racing, led to the use of the best of alloyed materials, making possible quietness, as well as lightness. To just what extent this develop-

Digitized by Google

ment would have reached in so short a time, except for racing, is problematical, but my impression is that we would have been years behind where we are now.

No longer ago than 1910 the question whether a racing car could be equipped with a shaft-driven axle, with any degree of success, owing to the excessive weight, was a matter of very common discussion, the chain drive being the only type considered fit for racing, owing to the fact that it permitted such light construction as compared to the construction with differential as in use at that time. At the present time, however, our latest interpretations of what the lightest racing car should be discloses the fact that it is equipped with shaft-driven axles.

Ease in riding is also a development resulting, I believe, directly from racing. In racing the need of easy riding qualities has been neglected to a great extent, but the necessity of being able to keep the wheels on the ground led to a great amount of experimenting, to discover the best possible means for accomplishing it. All manner of shock-absorbing devices gave way to the conclusion reached that the sprung and unsprung parts must necessarily bear a given ratio one to the other. My personal experience has indicated that 25 per cent. in front and 35 per cent. in the rear is about the limit of the unsprung parts to that above the springs, the result being that slippages of not over 1 per cent. to 1½ per cent. are to be had, while several years ago 5 per cent. was not considered excessive. Experiments disclosed the fact that easy riding was merely the result of keeping the wheels on the ground, and not, as commonly supposed, a factor to be considered by itself. While the importance of the above-mentioned consideration is illustrated vividly in racing cars, owing to the light weight desired, the body and passenger load in pleasure vehicles relieves the necessity for lightness to a great extent. In the matter of rear axles for our racing cars, we have been able, by the use of chrome nickel and air-hardened steels, to get the weight of the entire differential unit, including the carrier, down to 39 pounds. The limit of this weight was governed, not so much by the strength of the materials, as by the proper section to make gear hardening possible. The same units in stock cars weigh practically 90 pounds, this being the weight necessary for the sake of strength, owing to the use of relatively poor material. My belief is that while the urgent need of lightness in this part does not go to the extremes that it does in racing, it will be money well spent, and would necessarily better the riding qualities, and also increase tire life, inasmuch as it would reduce materially tire slippage, and is one of the points easily gained, demanding only a slight increase in the cost of material, and the use of a reasonable amount of ordinary judgment in design.

Spring suspension is also a matter worthy of consideration in stock cars as well as in racing, but in the case of the pleasure car its line of development seems to be somewhat neglected, everybody being prone to follow conventional lines. The bringing out of the so-called cantilever suspension is a big advance in the matter of light unsprung parts, placing as it does, the weight of the springs on the sprung portion. I recently

Digitized by Google

attempted the modification of driving through the springs rather than the radius rods, in an attempt to overcome the tendency to buckle the spring, and destroy the ribbon action, which happens in the case of driving through the front end. This I accomplished by virtually pulling the car through the use of the semi-elliptic spring, fastened permanently to the rear end and shackled to the front, my theory being that putting the spring under tension instead of compression would materially help this ribbon action, and do away with the necessity of increasing the spring strength, as is necessary when driving through the front end. This was applied to the Grand Prize Mercer cars, and was also tried out in stock car experiments covering a period of several months. The conclusions reached are that it is worthy of consideration. It made a hard-riding racing car ride as easily as any touring car. Just how much of this accomplishment can be credited to the manner of spring suspension is problematical, owing to the fact that we decreased the weight of the unsprung parts in other directions at the same time. The tendency, however, for the car to settle when the power was applied, rather than jump up in the common manner, leads me to believe that a great portion of the results was due to the spring suspension.

This seems like an argument against the cantilever type of spring, inasmuch as it is almost necessary with it, if driving through the spring is resorted to, to put the spring under compression. The manner described, I believe, would not only be more economical, but fully as good as the cantilever type, with a number of distinct advantages.

While many designers, working solely in the commercial field, will no doubt resent some of the broad assertions made in this discussion, they are in reality only copying the conclusions reached by men who produced formulas and tables of results by employing methods as described, the necessity of which, I believe, had its inception in racing. Each of the points at issue, considered only in respect to itself, does not appear far-reaching, but the general trend of modern automobile design is, and has always been covered, to my mind, by the above issues broadly considered.

Two of the most pronounced illustrations of this assertion, I would say, are the 6-cylinder motor and the sleeve type of motor. Neither of these seems to have had its inception in racing, but a close analysis of the inherent principles, will, I believe, show that these motors became possible only as a result of the wonderful developments of the 4-cylinder and poppet-valve types. The L-head motor is another type that apparently has no value as a racing motor, it no doubt having had its inception in an endeavor to decrease weight. The fact that a single camshaft resulted in greater quietness, was a development rather than a consideration when first designed.

The streamline body, which has found great favor, since the comfort possible is so great, is, to my mind, a direct result of the wonderful advantages shown in racing bodies, developed purely as a means of decreasing the wind resistance, which is such a great detriment to speed.

The wire wheel had its inception in racing, as a means to an end, to

Digitized by Google

get an exceptionally strong wheel with a great decrease in weight. This development came along with the recognized necessity of lightness in the unsprung parts, and was by no means the smallest factor that had to be dealt with. The easy-riding qualities of this wheel would hardly have been known if necessity had not demanded its construction.

Generally, and in conclusion, I would state that even in the midst of such wonderful examples of the modern designer's ability, and bearing in mind the remarkable development introduced by our metallurgists, it is surprising to note the new things to be learned at every race meet. Prominent among these is the fact that so many undue stresses on the chassis seem to occur, that cannot be figured in any way, but are demonstrated plainly in a racing car. This applies to all parts of the car, and illustrates fully that fatigue-resisting metals must be used practically throughout. Keys holding gears that have pressed fits, and other minor parts, such as magneto-drive shafts, pump shafts and the like, that appear in ordinary carbon or nickel steels to be more than strong enough, considered from the standpoint of known stresses, will rupture frequently and at unequal periods during the life of a racing car. An easy way to be safe is to use the highest quality of chrome nickel or vanadium steels, thoroughly heat treated, the cost of which is nominal.

No doubt the same condition prevails in numerous failures on pleasure cars that are often attributed to misuse or neglect. Occurring, as they do, however, at long intervals, the real reasons are seldom sought, and consequently the right conclusions are seldom reached.

The adoption, in my stock production of the past four years, of the principles stated, has resulted in cutting the up-keep cost of pleasure cars almost in half.

Although all designers do not participate in racing, the general results shown and talked of, are found to be the subject of discussion in almost every quarter—consequently in stating that my belief is that racing is directly responsible for the development of the modern automobile, which means that manufacturing facilities must keep pace with its development, I have no fear of contradiction, provided the subject be given unbiased consideration.

DISCUSSION

H. W. Slauson:—What is the weight of your racing motor per brake horsepower?

F. R. Porter:—About five pounds. It weighed just under 800 pounds.

H. W. Slauson:—If the unsprung weight of the chain-driven car is less than that of the shaft-driven car, I should think it would hold the road better. How is that point overcome in the shaft-driven car?

F. R. Porter:—The shaft-driven car is not very much heavier.

Mr. Whitman:—I would like to inquire what saving in weight there is in the use of wire wheels over wood for racing.

F. R. Porter:—There is very little saving in the total weight, but

Digitized by Google

most of the weight is in the hub of a wire wheel, which makes considerable difference in its gyroscopic action.

MR. AHRENS:—What effect will the question of fuel economy have on the design of the motor which Mr. Porter spoke of, when it comes up in future races in the United States?

F. R. PORTER:—Fuel economy is something I have never striven for, but it will mean a higher speed motor, no doubt. The Grand Prize winner at Santa Monica made about thirteen and a half miles to the gallon. The limitation abroad was sixteen miles to the gallon, I believe.

OFFICERS OF THE SOCIETY

President, Henry M. Leland, Detroit, Michigan.

Vice-president, William Guy Wall, Indianapolis, Indiana.

Vice-president, K. W. Zimmerschied, Detroit, Michigan.

Treasurer, Hermann F. Cuntz, New York.

Chairman of Finance Committee, H. M. Swetland, New York.

Secretary and General Manager, Coker F. Clarkson, New York.

MEMBERS OF THE COUNCIL

Henry M. Leland, Detroit, Mich.

William Guy Wall, Indianapolis, Ind.

K. W. Zimmerschied, Detroit, Mich.

Hermann F. Cuntz, New York.

Joseph A. Anglada, New York.

Harold L. Pope, Cleveland, O.

E. F. Russell, Longmeadow, Mass.

Christian Girl, Cleveland, Ohio.

Henry C. Wilson, New York.

Walter C. Baker, Cleveland, Ohio.

H. W. Alden, Detroit, Mich. (Past President).

Howard Marmon, Indianapolis, Ind. (Past President).

Digitized by Google

SECTIONS OF THE SOCIETY

DETROIT SECTION

E. T. BIRDSALL.....*Chairman*
C. T. MYERS and W. N. OSBURN.....*Vice-Chairmen*
HERBERT L. CONNELL.....*Secretary and Treasurer*

(Address) 109 Webb Avenue, Detroit, Mich.

Meets first Thursday each month at 8 p. m., in the Employers' Association Rooms, Stevens Building, Detroit, Mich.

INDIANA SECTION

LON R. SMITH.....*Chairman*
R. H. COMBS.....*Vice-Chairman*
CHAS. P. GRIMES.....*Secretary-Treasurer*

(Address) Wheeler & Schebler, Indianapolis, Ind.

Meets first Tuesday after first Wednesday each month at 8 p. m., at the Hoosier Motor Club in the Claypool Hotel, Indianapolis, Ind.

METROPOLITAN SECTION

JOSEPH A. ANGLADA.....*Chairman*
HERBERT CHASE.....*Treasurer*
NIRAN BATES POPE.....*Secretary*

(Address) 1790 Broadway, New York City.

Meets last Thursday each month, except July and August, 8 p. m., at the Automobile Club of America, 247 West Fifty-fourth Street, New York City.

CLEVELAND SECTION

JAMES H. HERRON.....*Chairman*
H. B. ANDERSON.....*Vice-Chairman*
A. J. SCAIFE.....*Treasurer*
R. J. NIGHTINGALE.....*Secretary*
E. R. HALL
J. H. HERTNER } ..... *Members Board of Directors*
R. H. MANSON

Digitized by Google

Digitized by Google

CONSTITUTION

As revised August 24, 1914

BY-LAWS
RULES

As revised October 14, 1914

Digitized by Google

CONSTITUTION

NAME, OBJECT AND GOVERNMENT

C 1 The title of this Society is "THE SOCIETY OF AUTOMOBILE ENGINEERS."

C 2 The object of the Society is to promote the Arts and Sciences and Standards and Engineering Practices connected with the design and construction of automobiles, all forms of self-propelled or mechanically propelled mediums for the transportation of passengers or freight, and internal combustion prime movers. The principal means for this purpose shall be the holding of meetings for the reading and discussion of professional papers and reports, the publication and distribution of the same, and social intercourse.

C 3 The Society shall be governed by this Constitution and by By-Laws and Rules in harmony therewith.

C 4 The Society shall be organized as a Corporation under the laws of the State of New York. Its offices shall be located in the City of New York.

MEMBERSHIP

C 5 The membership of the Society shall consist of Honorary Members, Members, Associates, Juniors, Departmental Members and Affiliate Members. Honorary Members and Members are entitled to vote and to hold office. Associ-

Digitized by Google

ates, Juniors, Departmental Members and Affiliate Members shall not be entitled to vote or to be officers of the Society, but shall be entitled to the other privileges.

C 6 Honorary Members and Members are entitled to vote on all questions at any meeting of the Society, in person, or by proxy given to a voting member. A proxy shall not be valid for a greater time than six months.

C 7 Honorary Members shall be persons of acknowledged professional eminence, and their number shall not exceed one per cent. of the total membership at the time of their election.

C 8 Member grade shall be composed of persons twenty-six years of age or over who, by previous technical training or experience or by present occupation, are qualified to act as designers or constructors of complete automobile vehicles, or their component parts, or their equipment, or to exercise technical supervision of the production of materials of engineering construction; or to take responsible charge of automobile engineering work; or to impart technical instruction in automobile vehicle construction and operation.

C 9 Associate grade shall be composed of persons who are engaged in the automobile and related industries in a responsible commercial or financial or manufacturing capacity, or who are so connected with the automobile and related industries as to be competent to co-operate with automobile engineers.

C 10 Junior grade shall be composed of persons who at the time of election are under twenty-six years of age and qualified to fill subordinate engineering positions in the automobile or allied industries, or who are regularly enrolled students at or graduates of a technical school. A Junior member may upon reaching the age of twenty-six and shall upon reaching the age of thirty be transferred to Member or Associate grade, in accordance with the decision of the Council as to which grade his qualifications entitle him.

C 11 An Affiliate Member shall be a firm or corporation interested in the object of the Society as set forth in C 2. Affiliate Members shall designate and maintain at least one

Digitized by Google

personal representative, and, with the approval of the Council, may designate five additional personal representatives.

C 12 A Departmental Member shall be a department, bureau or office of a national, state, county or municipal government interested in the object of the Society as set forth in C 2. The life of a Departmental membership shall comprise a first period of ten years, with extensions of like periods, or otherwise, in the discretion of the Council. Departmental Members shall, upon notification of election, designate and maintain one personal representative.

C 13 The rights and privileges of every Honorary Member, Member, Associate and Junior shall be personal to himself, and shall not be transferable by his own act or by operation of law. Departmental Membership and Affiliate Membership also shall not be transferable.

ADMISSION

C 14 Honorary Members shall be nominated by at least ten Members of the Society. The grounds upon which the nomination is made shall be presented to the Council in writing.

C 15 All original applications for election to the grade of Member, Associate or Junior shall be presented to the Council, which shall consider and act upon each application, electing each applicant to the grade of membership to which, in its judgment, his qualifications entitle him. Two negative votes shall defeat an election.

C 16 Upon written request by the applicant, the Council may transfer a member from one grade to another, providing satisfactory proof is presented to it that said member is qualified for transfer to the other grade.

C 17 The election of Honorary Members shall be by a vote of the Council taken by letter ballot, as provided in the By-Laws. One dissenting vote shall defeat such election.

C 18 The election of Departmental Members and Affiliate Members shall be by a majority vote of the Council.

Digitized by Google

C 19 Each member elected, excepting Honorary Members, shall pay initiation fee and current dues before becoming entitled to the rights and privileges of membership. Upon noncompliance with this requirement within three months after notice of election, the election becomes void.

INITIATION FEES AND ANNUAL DUES

C 20 The initiation fee for membership in each grade and for student enrollment shall be as follows:

For Member	$25.00
For Associate	25.00
For Junior	10.00
For Student Enrollment	None
For Departmental Member	100.00
For Affiliate Member	50.00

C 21 The annual dues for membership in each grade and for student enrollment shall be as follows:

For Member	$15.00
For Associate	15.00
For Junior	5.00
For Student Enrollment	3.00
For Departmental Member	None
For one Affiliate Member Representative	$15.00
For each additional Affiliate Member Representative	10.00

C 22 Upon transfer of a Junior to Member, or Junior to Associate, such member shall pay the difference in initiation fee of the grades; and thereafter pay the annual dues for the grade to which he is transferred.

LIFE MEMBERS

C 23 The Council may, in its discretion, permit any Member or Associate to become a Life Member in the same grade, by the payment at one time of an amount sufficient to purchase from the Equitable Life Assurance Society, of New York, an annuity on the life of a person of the age of the applicant, equal to the annual dues in this grade. Such Life Member shall not be liable thereafter for annual dues.

Digitized by Google

C 24 The Council shall have the power, by letter ballot, to admit to Life Membership, without the payment of a life membership fee, any person who, for a long term of years, has been a Member or an Associate, when, for special reasons, such procedure would, in its judgment, promote the best interests of the Society, provided that notice of such proposed action shall have been given at a previous meeting of the Council. One dissenting vote shall defeat such admission.

SUSPENSIONS AND EXPULSIONS

C 25 Any Member, Associate, Junior or Affiliate Member who shall leave the annual dues unpaid for three months shall not receive any publications of the Society until such arrears are paid. Any Member, Associate, Junior or Affiliate Member who shall leave the dues unpaid for one year shall, in the discretion of the Council, cease to have any further rights in the Society and be stricken from the roll of membership. The resignation of a member, whose account with the Society is not fully settled, can be accepted only by vote of the Council.

C 26 The Council may temporarily suspend the annual payment of dues by any Member, Associate or Junior, whose circumstances have become such as to make it impossible for him to pay the dues, and may under similar circumstances, remit the whole or a part of dues in arrears. Such action shall be taken only upon the written application of the Member, Associate or Junior, signed by three other members in good standing.

C 27 Any member of any grade who in the judgment of the Council has violated the Constitution, By-Laws or Rules of the Society, or, in the opinion of the Council by a unanimous vote, has been guilty of conduct rendering such member unfit to continue in the membership of the Society, may be expelled from membership, provided, that in all such cases, the member shall have been given written notice of the charges and an opportunity to defend himself.

DUES NOT RETURNABLE

C 28 Members of any grade shall not be entitled to any return of fees or dues upon severing their connection with the Society.

Digitized by Google

THE COUNCIL

C 29 The affairs of the Society shall be managed by a board of twelve directors chosen from among its Members or Honorary Members, which shall be styled "The Council." The Council shall consist of the President, the First Vice-president, the Second Vice-president, six Councilors, the Treasurer and the two surviving Past-presidents who last held office. Four Members of the Council shall constitute a quorum for the transaction of business. The Secretary may take part in the deliberations of the Council, but shall not have a vote therein. The Chairman of the Finance Committee and the Chairman of the Standards Committee may attend the meetings of the Council and take part in the discussion of questions affecting their committees, but shall not have a vote.

C 30 Should a vacancy occur in the Council, or in any elective office except the Presidency, through death, resignation or other cause, the Council may elect a Member or Honorary Member to fill the vacancy until the next annual election.

EXECUTIVE COMMITTEE

C 31 The Council shall regulate its own proceedings and may by resolution delegate specific powers to an Executive Committee or to any one or more members of the Council. No act of the Executive Committee or of a delegate shall be binding until it has been approved by a resolution of the Council.

ANNUAL REPORT

C 32 The Council shall present at the annual meeting of the Society a report, verified by the President or Treasurer or by a majority of the Members of the Council, showing the whole amount of real and personal property owned by the Society, where located, and where and how invested, and the amount and nature of the property acquired during the year immediately preceding the date of the report, and the manner of the acquisition; the amount applied, appropriated or expended during the year immediately preceding such date, and the purposes, objects or persons to or for which such applications, appropriations, or expenditures have been made; also the names and places of residence of the persons who have been admitted into membership

Digitized by Google

in the Society during the last year; which report shall be filed with the records of the Society, and an abstract thereof shall be entered in the minutes of the proceedings of the Annual Meeting.

IMPLIED SANCTION

C 33 An act of the Council which shall have received the expressed or implied sanction of the membership at any subsequent meeting of the Society, shall be deemed to be the act of the Society, and shall not afterwards be impeached by any member.

VACATING OFFICES

C 34 The Council may, by a two-thirds vote of the members present, declare any elective office vacant, on the failure of its incumbent for six months, from inability or otherwise, to attend the Council meetings, or to perform the duties of his office, and shall thereupon appoint a Member or Honorary Member to fill the vacancy until the next Annual Meeting. The said appointment shall not render the appointee ineligible to election to any office.

OFFICERS

C 35 At each Annual Meeting there shall be elected from among the Members and Honorary Members:

A President, to hold office for one year
A First Vice-president, to hold office for one year
A Second Vice-president, to hold office for one year
Three Councilors, each to hold office for two years
A Treasurer, to hold office for one year

C 36 The election of officers shall be by sealed letter ballot, as the By-Laws shall provide.

C 37 The term of all elective officers shall begin on the adjournment of the Annual Meeting of the Society. Officers shall continue in their respective offices until their successors shall have been elected and accepted their offices.

C 38 A President, a Vice-President or any other voting member of the Council, except the Treasurer, shall not be eligible for immediate re-election to the same office at the expiration of the term for which he was elected.

Digitized by Google

SECRETARY

C 39 The Council at its first meeting after the Annual Meeting of the Society, shall appoint a person of the grade of Member to serve as Secretary of the Society for one year, subject to removal for cause by an affirmative vote of the members of the Council, at any time after one month's written notice has been given him to show cause why he should not be removed, and he has been heard in his own defense, if he so desires. The Secretary shall receive a salary which shall be fixed by the Council at the time of his appointment.

DUTIES OF PRESIDENT, SECRETARY AND TREASURER

C 40 The President, Secretary and Treasurer shall perform the duties legally or customarily attaching to their respective offices under the laws of the State of New York, and such other duties as may be required of them by the Council.

MEETINGS

C 41 The Society shall hold two meetings in each year. The Annual Meeting and a Semi-Annual Meeting shall be held at such time and place as the Council may appoint. Fifty voting Members shall constitute a quorum for the transaction of business.

C 42 Special meetings of the Society may be called at any time at the discretion of the Council, or shall be called by the President upon the written request of ten per cent. of the voting membership, the notices for such meeting to state the business for which they are called; and no other business shall be entertained or transacted at any such special meeting.

APPROPRIATIONS

C 43 Any appropriation recommended by the Society at a meeting, shall not take effect until it shall have been approved by the Council.

VOTE REQUIRED FOR ACTION

C 44 Every question which shall come before a meeting of the Society or of the Council or of a committee, shall be decided by a majority of the votes cast, unless otherwise provided in this

Digitized by Google

Constitution or By-Laws, or the Laws of the State of New York. The Council may order the submission of any question to the membership by letter ballot. Any meeting of the Society at which a quorum is present, may order the submission of any question to the membership by letter ballot.

ADMINISTRATIVE COMMITTEES

C 45 The President shall within thirty days after taking office appoint, from the individual membership of the Society, the following Committees, designating the Chairmen thereof:

Finance Committee, consisting of five members
Meetings Committee, consisting of five members
Publication Committee, consisting of five members
Membership Committee, consisting of five members
House Committee, consisting of five members
Tellers as required by the By-Laws

NOMINATING COMMITTEE

C 46 The Nominating Committee shall consist of seven Members, and be elected annually. Four members of the committee shall be elected at the business session of the Semi-Annual meeting of the Society preceding the Annual meeting at which officers are to be elected. The three Sections of the Society having the largest membership shall each elect one member of the committee, prior to the respective Semi-Annual meeting of the Society.

C 47 *Special Nominating Committee*

Twenty or more members entitled to vote may constitute themselves a Special Nominating Committee, with the same power as the Annual Nominating Committee.

STANDARDS AND PROFESSIONAL COMMITTEES

C 48 The Council shall appoint annually such Standards or Professional Committees, or sub-committees or Divisions thereof as it may deem desirable, to investigate, consider and report upon subjects of interest to the Society. The Chairmen of such committees, and of their subdivisions, shall be designated by the President. Reports of such committees may be accepted by the Society and printed in its publications, and may be approved or adopted as the action of the Society.

Digitized by Google

DUTIES OF COMMITTEES

C 49 All committees of the Society shall perform the duties required of them by the By-laws, or assigned to them by the Council. The President and the Secretary of the Society shall, ex officio, be members of all the committees and subdivisions thereof. Any proposed expenses of such committees must be authorized by the Council before they are incurred.

REMOVAL OF COMMITTEE MEMBERS

C 50 The Council may at any time, in its discretion, remove any or all members of any committee, except of a Nominating Committee; and the vacancy, arising from this or from any other cause, shall be filled by appointment by the President.

SECTIONS OF THE SOCIETY

C 51 The Council may, in its discretion, authorize the organization of Sections of any or all grades of membership, for purposes which are in harmony with the object of the Society. Such Sections may be geographical or professional, and shall have such powers and act under such rules and regulations as the Council may from time to time prescribe. The Constitution and By-Laws of such Sections shall be in harmony with the Constitution, By-Laws and Rules of the Society and shall receive the approval of the Council before going into effect.

STUDENT ENROLLMENT

The Council may further, in its discretion, authorize the enrollment, individually or by group, of persons under thirty years of age who, at the time of application, shall be bona fide students of a recognized institution of engineering, or pursuing a course of study in automobile engineering. Student enrollment shall be for a term of three years, which term shall not be renewable. Enrolled students shall not be members of the Society, or be entitled to vote or hold office.

PUBLICATIONS

C 52 The official record of papers, reports and discussions and other literature of interest to the Society shall be published and distributed as the Council may direct. The public shall

Digitized by Google

have free access to the library of the Society, under such regulations as the Council may formulate.

C 53 The Society shall claim no exclusive copyright to any papers read at its meetings, or any reports or discussions thereon. The policy of the Society shall be to give the papers read before and reports adopted at its meetings wide circulation, with a view to making the work of the Society known, encouraging engineering progress, fulfilling the Society's object and extending the professional reputation of its members.

C 54 The Society shall not be responsible for statements or opinions advanced in papers or in discussions at its meetings. Matters relating to politics or purely to trade shall not be discussed at a meeting of the Society, or be included in its publications.

STANDARDS AND FORMULAS

C 55 The Society may approve or adopt any standard, formula or engineering practice, but shall not approve any engineering or commercial enterprise. It shall not consent to the use of its name or initials in any commercial work or business, except to indicate conformity with its standards or recommended practices.

The right to use the Society emblem shall not be granted to any but members and then only for Society purposes.

AMENDMENTS TO THE CONSTITUTION

C 56 At any Annual or Semi-Annual Meeting of the Society any voting member may propose in writing an amendment to this Constitution. Such proposed amendment shall not be voted on at that meeting, but, if duly seconded by a voting member, shall be open to discussion and to such modification as may be accepted. The proposed amendment shall be mailed by the Secretary to each member of the Society entitled to vote, at least sixty days previous to the next Annual or Semi-annual Meeting, accompanied by comment of the Council, if it so elects. At that Annual or Semi-Annual Meeting such proposed amendment shall be presented for discussion and final amendment, and shall subsequently be submitted by letter ballot to all members entitled to vote, provided that 20 votes are cast in favor of such submission. The letter ballot, accompanied by the text of the proposed amendment, shall be mailed by the Secretary to each member of the Society entitled to vote, promptly after the close of the said meeting. Thirty days after the date on which the ballots

Digitized by Google

are mailed to the voting membership, the ballots returned shall be counted by Tellers appointed as provided in the By-Laws. The Tellers shall announce immediately the result of the vote, which shall be mailed to the members by the Secretary. The adoption of the amendment shall be decided by a majority of the votes cast.

An amendment shall take effect immediately upon the announcement of its adoption.

AMENDMENTS TO BY-LAWS AND RULES

C 57 For the further ordering of the affairs of the Society, the Council may, by a two-thirds vote of its members present, amend the By-Laws in harmony with this Constitution, provided that written notice of such proposed amendment shall have been given at the previous regular meeting of the Council; and, provided further, that the Secretary shall have mailed to each member of the Council a copy of such proposed amendment, at least ten days in advance of the meeting of the Council at which action is to be taken. The amendment shall take effect immediately on its passage by the Council. Such amendment shall be announced in the next regular publication of the Society.

C 58 The Council may, by a majority vote of the members present at any meeting, establish, amend, or annul Rules for the conduct of the business affairs of the Society; for the ordering and conduct of its professional or business meetings; and for the guidance of its committees in their work and reports—provided that such Rules are in harmony with the Constitution and By-Laws of the Society.

BY-LAWS

CANDIDATES FOR MEMBERSHIP

B1—A candidate for admission to the Society as a Member, Associate or Junior must make application on a form approved by the Council, upon which he shall write a statement giving a complete account of his qualifications and engineering or other required experience, and an agreement that he will, if elected, conform to the Constitution, By-Laws and Rules of the Society. He shall refer to at least five Members, Associates or Juniors with whom he is acquainted.

B2—Applications for admission to the Society from persons who are

Digitized by Google

not resident in the United States or Canada, or who may be so situated as not to be personally known to five Members, Associates or Juniors of the Society, as required in the foregoing paragraph, may be elected by the Council, after sufficient evidence has been secured to show that in its opinion the applicant is eligible for admission to the respective grade.

B3—References shall not be required of candidates for Honorary, Departmental or Affiliate Membership.

B4—The references for each candidate for admission to the Society or student enrollment may be requested to make confidential communication setting forth in detail such information, personally had by them, as will enable the Council to arrive at a proper estimate of eligibility of the candidate.

B5—Each applicant for student enrollment shall be endorsed by a member of the Society and approved by the Council. Student enrollment shall be revocable at the pleasure of the Council. Enrolled students shall receive the regular monthly publication and may attend meetings of the Society.

B6—The Secretary shall present to the Council at each meeting, applications of candidates for membership in the Society, except in the case of Honorary Members. He shall announce to the candidates the result of the application.

The name of an applicant for membership must be printed in at least one issue of a publication of the Society, prior to election.

B7—The references of an applicant who has failed of election may, with his consent, present to the Council a written request for a resubmission of his name. The Council may, in its discretion, by a three-fourths vote of the members present, order the name of the applicant resubmitted for election.

B8—Election to Honorary Membership shall be by letter ballot of the Council. A notice of such proposed election shall be mailed by the Secretary to each member of the Council at least sixty days in advance of the date set for the closure of such election.

ELECTION OF OFFICERS

B9—The Secretary shall mail to each member entitled to vote, at least thirty days before the Annual Meeting, the names of the candidates for office proposed for election by the Nominating Committee or Committees.

B10—The names of the candidates proposed by the Nominating Committee or Committees, and the respective offices for which they are candidates, shall be printed in separate lists on the same ballot sheet, each list of candidates to be printed under the names of the members of the particular committee which proposed it.

B11—The name of any candidate on the ballot may be erased and the name of any person qualified to hold the office written in its stead. The voter shall enclose said ballot in a sealed blank ballot envelope which he shall then enclose in a second sealed outer envelope on which he shall, for identification, write his name in ink. The ballot thus prepared and enclosed

Digitized by Google

shall be mailed or delivered unopened to the Tellers of Election of Officers. The Secretary shall certify to the competency and the signature of all voters.

The Tellers shall not receive any ballot after the stated time of closure of voting. A ballot without the endorsement of the voter written in ink on the outer envelope is defective and shall be rejected by the Tellers. At the first session of the Annual meeting the Tellers shall first open and destroy the outer envelopes and then canvass the ballots and certify the result to the meeting of the Society.

B12—In case of a tie in the vote for any officer, the President or, in his absence, the presiding officer, shall cast the deciding vote.

B13—A ballot which contains more names marked by a cross on it than there are officers to be elected, is thereby defective, and shall be rejected by the Tellers.

FEES AND DUES

B14—The initiation fee and the current annual dues of the first year shall be due and payable on notice of election to membership, and upon the payment the member will be entitled to the Society's publications for the year. Thereafter the annual dues shall be due and payable on the first day of October in each year.

The annual dues for Student Enrollment shall be due and payable upon notice of enrollment.

The initiation fee for Departmental Member shall be due and payable upon notice of election and upon such payment such member will be entitled to the Society's current publications.

B15—A Member in arrears for three months shall not be entitled to vote until such arrears have been paid. Should the right to vote be questioned, the books of the Society shall be conclusive evidence.

B16—The Secretary shall present to the Council the name of any Member, Associate, Junior or Affiliate Member in arrears for more than three months, and such member shall not receive the publications of the Society until such arrears are fully paid. A person dropped from the rolls for nonpayment of dues may at the discretion of the Council be restored to the privileges of membership, upon payment of all arrears.

FINANCIAL ADMINISTRATION.

B17—The Council shall each year consider the recommendations of the Finance Committee concerning the expenditures necessary for the work of the Society during each coming fiscal year. The apportioning of the work of the Society among the various administrative and other committees shall be on a basis approved by the Council and in harmony with the Constitution and By-Laws. The appropriations approved by the Council, or so much thereof as may be required for the work of the Society, shall be expended by the Secretary acting as General Manager, under the direction

Digitized by Google

of the various committees of the Society, and all bills against the Society for such expenditure shall be certified by the Secretary and shall then be sent to the Finance Committee monthly for approval. Money shall not be paid out by any officer or employee of the Society except upon vouchers duly audited or authorized by the Finance Committee or the Council.

FINANCE COMMITTEE

B18—The Finance Committee shall, under the direction of the Council, have supervision of the financial affairs of the Society, including the books of account. The Committee may cause the accounts of the Society to be audited and approved annually by a chartered or other competent public accountant. The Committee shall make recommendations to the Council as to investments, and, when called upon by the Council, advise upon financial questions.

MEETINGS COMMITTEE

B19—It shall be the duty of the Meetings Committee to procure professional papers, pass upon their suitability for presentation, and suggest topical subjects for discussion at the meetings. The Committee may refer any paper presented to the Society to a person or persons especially qualified by theoretical knowledge or practical experience for suggestion or opinion as to the suitability of the paper for presentation. Papers from non-members shall not be accepted except by unanimous vote of the Committee.

The Committee shall arrange the program of each meeting of the Society, and have general charge of the entertainments to be provided for the members and guests at each meeting. It shall prohibit the distribution or the exhibition for other than reference purposes of all advertising circulars or trade literature at the headquarters or at the meeting place of the Society.

PUBLICATION COMMITTEE

B20—The Publication Committee shall review all papers and discussions which have been presented at the meetings of the Society or its Sections, and decide what papers or discussions, or parts of the same shall be printed in the publications of the Society and what shall be omitted. The Committee will be expected to publish all such data as will be of assistance to engineers or investigators in their work.

MEMBERSHIP COMMITTEE

B21—It shall be the duty of the Membership Committee to devise and to carry into effect, with the approval of the Council, ways and means for increasing the membership of the Society in accordance with the provisions of the Constitution as to the qualifications for membership.

Digitized by Google

HOUSE COMMITTEE

B22—It shall be the duty of the House Committee to have the care, management and maintenance of the rooms of the Society and its furnishings.

EXECUTIVE COMMITTEE

B23—The Executive Committee, if appointed by the Council, shall make a report of its acts at each session of the Council, for approval. The Secretary may take part in the deliberations of the Executive Committee, but shall not have a vote therein.

NOMINATING COMMITTEES

B24—It shall be the duty of the Nominating Committee to organize at the summer meeting of the Society and to send to the Secretary, on or before October 1st, the names of consenting nominees for the elective offices next falling vacant under the Constitution. The report of the Committee shall be printed in the next current publication of the Society.

B25—A special Nominating Committee, if organized, shall, on or before November 15th, present to the Secretary the names of the candidates nominated by it for the elective offices next falling vacant under the Constitution, together with the written consent of each. The report of the Committee shall be printed in the next current publication of the Society.

SOCIETY DELEGATES

B26—The Council, may, in its discretion, appoint a member or members of any grade of the Society, or other person or persons, to represent it at meetings of societies of kindred aim or at public functions. The duties of such delegates shall terminate with the occasion for which they were appointed.

TELLERS

B27—The presiding officer shall, at the first session of the Annual Meeting, appoint three Tellers of Election of Officers, whose duties shall be to canvass the votes cast, and report the result to the meeting. Their term of office shall terminate when their report of the canvass is presented to the meeting.

B28—The President shall appoint three Tellers to canvass any letter ballots which shall be ordered by the Council or by the Society.

MEETINGS

B29—The Annual Meeting of the Society shall be the first regular meeting of the calendar year, and the Semi-Annual Meeting shall be the second regular meeting of the calendar year. The business session of the Annual and of the Semi-Annual Meeting shall be the first session of each such meeting.

Notice of the Annual and Semi-Annual Meetings of the Society shall be printed in a publication of the Society not less than thirty days before the date or dates of each such meeting.

Digitized by Google

SECRETARY

B30—The Secretary of the Society shall be the Secretary of the Council.

The Secretary shall, under the supervision of the Finance Committee, have charge of the books of account of the Society; shall make and collect all bills against members or others; shall have charge of all bills against the Society, and shall keep an account of the same, and present them in proper form to the Finance Committee for approval.

All funds received by any person for the Society shall be delivered to the Secretary, who shall immediately enter them in the books of account, and deposit such funds as he receives to the credit of the Society, in a bank to be designated by the Council.

TREASURER

B31—The Treasurer shall make payments only upon the approval of the Finance Committee, or upon the direction of the Council by resolution. He shall furnish a bond for the faithful performance of his duties to such amount as the Council may require, such bond to be procured from an incorporated guarantee company, at the expense of the Society.

CERTIFICATES

B32—Each Member, Associate, Junior, Departmental Member and Affiliate Member shall, subject to such rules as the Council may establish, be entitled to a certificate of membership, signed by the President and Secretary of the Society. Every such certificate shall remain the property of the Society and be returned to it on demand of the Council.

PROXIES

B33—Each proxy authorizing a voting member to vote for an absent Member, shall be signed by such absent Member, with an attesting witness, and be submitted to the Secretary for verification of the Member's right to vote at the meeting at which the right is to be exercised.

EMBLEMS

B34—The emblem of each grade of membership approved by the Council shall be worn by those only who belong to that grade. The official stationery shall be used only by Officers and Committees of the Society.

TITLES

B35—The approved abbreviations of the title of the various grades of membership are as follows:

For Honorary Members	Hon. M.S.A.E.
For Members	M.S.A.E.
For Associates	A.S.A.E.
For Juniors	Jun. S.A.E.
For Departmental Members	Depart'l Mem. S.A.E.
For Affiliate Members	Affil. Mem. S.A.E.

Digitized by Google

RULES

R1—The Secretary's office shall be open on business week days from 9 A.M. to 5 P.M.; on business Saturdays from 9 A.M. to 1 P.M.

R2—The Secretary shall provide an identification badge or pin for each member or guest attending the regular meetings. A register shall be kept for each regular meeting, to record the attendance of members and guests.

ORAL DISCUSSION

R3—Each person shall be limited to five minutes in the oral discussion of a paper, unless the time be extended by unanimous consent. A person who has once had the floor may not claim it again until all the others who desire to speak on the subject under discussion have been heard. Authors shall have not less than five minutes to close discussion on their papers.

PAPERS

R4—The Meetings Committee shall deliver to the Secretary all papers it recommends for presentation at the professional sessions of the Society meetings in time to permit the printing and distribution of the papers in advance of the meetings.

R5—The Secretary shall have sole possession of papers and illustrations between the time of their approval by the Meetings Committee and their presentation at the professional sessions of the Society.

R6—So far as feasible or necessary, a copy of the reported discussion shall be sent to each member who presented it, with the request that he correct errors or omissions and return the same promptly to the Secretary.

R7—Members may order reprints of papers from the Society, provided that such copies are not to be resold.

R8—The Secretary may furnish each author twenty copies of his paper without charge. He may also furnish to the press copies of papers in advance of or after meetings.

LOCAL COMMITTEE

R9—The entertainment to be provided for the members and guests at any meeting of the Society in any city may be in charge of a Local Committee, subject, however, to the general approval of the Meetings Committee.

R10—A member of any grade may invite a non-member to the professional sessions of any regular meeting of the Society, except in case of a special ruling by the Council. Such invited guest shall not take part in any discussion without the permission of the presiding officer. Invitations to guests of members for entertainments provided for the Society shall be in the discretion of the Local Committee.

Digitized by Google

INDEX TO
CONSTITUTION, BY-LAWS AND RULES

Abbreviation of membership titles ..... B 35
Acceptance of reports of committees ..... C 48, 55
Administrative Committees ..... C 45
Adoption of reports of committees ..... C 48, 55
Affiliate Members, election of ..... C 18
  qualification of ..... C 11
Amendments to Constitution ..... C 56
  By-Laws ..... C 57
  Rules ..... C 58
Annual dues ..... C 21, 22, 25, B 14
  arrears ..... B 15, 16
  not returnable ..... C 28
  payment of ..... C 19
  suspension of ..... C 26
  Committees ..... C 45
  meeting ..... C 41, B 29
  notice of ..... B 29
  report of Council ..... C 32
Appropriations ..... C 43
Approval of reports of committees ..... C 48, 55
Associate Members, qualifications of ..... C 9
Appointment of committees ..... C 45, 48
Applications for membership ..... B 1, 6, 7
Ballot for officers ..... B 10-13
  letter ..... C 44
Badges for meetings ..... R 2
Bond for Treasurer ..... B 31
By-Laws, Amendment to ..... C 57
Candidates for officers ..... B 11
  qualifications of ..... B 9-12
  references ..... B 3, 4, 7, 8
Certificate of membership ..... B 32
Chairman of committees, appointment of ..... C 45, 48
Closure of discussion of papers by authors ..... R 3
Committees, annual ..... C 45
  administrative ..... C 45
  appointment of ..... C 45
  duties of ..... C 49
  Ex-officio members of ..... C 49
  executive ..... C 31
  nominating ..... C 46, 47
  professional ..... C 48
  Standards ..... C 48
  removal of members of ..... C 50
Constitution, amendments to ..... C 56
  goes into effect ..... C 56
Copyright ..... C 53
Corrections by speakers ..... R 6
Council, annual report ..... C 32
  composed of ..... C 29
  declaring position of member of vacant ..... C 34
  filling vacancy in ..... C 30
  quorum of ..... C 29

Digitized by Google

Delegates ..... B 26
Departmental Members, election of ..... C 18
qualifications of ..... C 12
Discussions, professional ..... R 3, 6, 10
Dues, annual ..... C 21, 25
arrears of ..... B 15, 16
payment of ..... C 19
suspension of ..... C 26
when payable ..... B 14
Duties of President, Secretary and Treasurer ..... C 40
Committees ..... C 49
Election of members ..... C 15
officers ..... C 35, 36, B 9-13
void for non-payment of initiation fee and current dues ..... C 19
Emblem of Society ..... B 34
use of ..... C 55
Engineering practice, approval or adoption of ..... C 55
Executive Committee ..... C 31, B 23
Expulsion of members ..... C 25, 27
Financial administration ..... B 17
Finance Committee ..... C 45, B 18
Formulas, approval or adoption of ..... C 55
Guests ..... R 10
Honorary Members ..... C 6, 7, 14, 17, B 8
House Committee ..... C 45, B 22
Implied Sanction ..... C 33
Imprint of the Society ..... C 55
Initials or name of Society in commercial work ..... C 55
Initiation Fees ..... C 20, 22, B-14
not returnable ..... C 28
payment of ..... C 19
Junior Members, procedure to change grade ..... C 10
qualifications of ..... C 10
Letter ballot ..... C 44
Life Members ..... C 23, 24
Library, public to have access to ..... C 52
Local Committees ..... R 9
Meetings, annual ..... C 41, B 29
Committee ..... C 45, B 19, R 4, 9
Program of ..... B 19
Register of ..... R 1, 2
Semi-annual ..... C 41, B 29
Special ..... C 42
Member, qualifications of ..... C 8
Members, election of ..... C 15
expulsion of ..... C 27
grades of ..... C 8-12
Life ..... C 23, 24
privileges of ..... C 5, 25
qualifications of ..... C 8-12
rights, personal ..... C 13
Membership, Committee ..... C 45, B 21
not transferable ..... C 13
suspensions ..... C 25, 26, B 16
transfer ..... C 16
Name or initials of Society in commercial work ..... C 55
Nominating Committee ..... C 46, B 24, 25
Non-resident applicants ..... B 2
Object of the Society ..... C 2, C 53

Digitized by Google

Office of the Society, location ..... C 4
open hours ..... R 1
Officers, election of ..... C 35, 36, B 9-13
term of ..... C 37
Oral discussion ..... R 3
Papers, professional ..... R 4-8
reprints of ..... R 7
Past-presidents, members of Council ..... C 29
Politics ..... C 54
President, member of Council ..... C 29
term of office ..... C 35
duties of ..... C 40
Press, technical ..... R 8
Privileges of membership ..... C 5, 25
not transferable ..... C 13
Professional committees ..... C 48
papers ..... R 4-8
Program of meetings ..... B 19
Proxies ..... C 6, B 33
Publications ..... C 52
Committee ..... C 45. B 20
Quorum for business ..... C 29, 41, 44
References of applicants ..... B 1-5
Re-election ineligibility ..... C 38
Reinstatement of members ..... B 16
Removal of Committee members ..... C 50
Reprints of papers ..... R 7
Required vote for action ..... C 44
Responsibility for statements in papers or discussions ..... C 54
Rules, amendment to ..... C 58
Resignations of members ..... C 25
Secretary ..... C 29, 39, 40, B 30, R 5
Sections of the Society ..... C 51
Semi-annual meeting ..... C 41, B 29
notice of ..... B 29
Special meetings ..... C 42
Nominating Committee ..... C 47
Standards Committee ..... C 48
appointment of members of ..... C 48
and formulas, approval or adoption of ..... C 55
Statements and opinions in papers, responsibility for ..... C 54
Student Enrollment ..... C 51, B 5
annual dues ..... C 21
Suspension of members ..... C 25, 26, B 16
Tellers of Election of Officers ..... B 11, 27, 28
Term of officers ..... C 37
Titles, abbreviation of membership ..... B 35
Trade matters ..... C 54
Transfer of members ..... C 16, 22
Treasurer ..... C 29, 40, B 31
Use of emblem ..... C 55
Vacancies in Council ..... C 34
Vacating offices ..... C 34
Vice-presidents, members of Council ..... C 29
term of office ..... C 35
Vote required for action ..... C 29, 41, 44

Digitized by Google

GENERAL INDEX

Air pumps 263
Air resistance characteristics 176
Autogenous welding 267
discussion of 280
Body design, tendencies in 281
Brake-arm readings 39, 43
British rim standardization, pneumatic tire 80
Broaches Division, Seventh report of as accepted 1
discussion of 6, 64
By-laws of the Society, Revised 355
Carbon steel specifications 8
Castle nut for taper fittings 4
recommended practice 64
Chemical analysis, errors in 66
Chromium steel specifications 13
Chromium vanadium steel specifications 14
Clincher rims, European standard 83, 101
Clutch for electric starters 151
Commercial motor testing forms 36
Constitution of the Society, revised 344
amendment to 58
discussion of 58
index to 362
Counters, speed 39
Demountable rims 94, 97, 101, 105
detachable rims 98
Drill sizes for tapped holes 194
for different materials 207
tables of 208
Dynamometers, balancing 41
Electrical Equipment Division, Fifth report of 17
discussion of 18, 67
Electric gear-shifting 242
application of 253
a specific type 248
discussion of 254
Electric lighting of motor cars 154
Electric transmissions 129
characteristic curves 131
discussion of 139
losses in 132

Digitized by Google

Electric welding 267
Electromagnets 242
characteristic pull curve 245
Engineering basis for taxation of motor vehicles..... 174
Society committee on desired..... 192
English rim standardization, pneumatic tire..... 80
European car construction, tendency in..... 220
rim standardization, pneumatic tire..... 80
Felloe band diameters, pneumatic tire..... 98
standardization 87, 100
Fifth Avenue buses, gasoline-electric..... 308
Forms for commercial motor tests 36
Four-spline recommended practice.....1, 64
Four- versus six-cylinder motors 235
Friction-horsepower measurement 42
Fuel consumption measurement 41
Fusing battery lead to starting motor 159
Fusion welding 167
Gages for threads 198
for pitch 200
Gasoline-electric vehicles 129, 303
discussion of 139
Gasoline motor trucks 122
Headlights, glare-preventing devices for..... 284
Horsepower measurement 42
Hours-per-day factor in road destruction..... 190
Ideal automobile, discussion on 211, 320
Ignition 162
Impurity content of steels 16, 66
Index to Constitution, by-laws and rules..... 362
Indicated-horsepower measurement 42
Indicator, charge and discharge on motor cars..... 160
Insulating material temperature test 17, 18
Iron and Steel Division, Fifth report as accepted..... 7
discussion of 15, 65
Junior grade of membership, Constitutional status of..... 60
Lighting circuits for motor cars..... 156
Lock washers, S. A. E. Standard, discussion of..... 46
Magnetic-pull characteristic curve 245
Magneto ignition 162
Metal cutting, oxygen 279
Metalloids in steel specification 16, 66
Motors, trend of American design 327
discussion of 330
of European design 220
Motor Testing Division, Second Report as accepted 36
discussion of 44, 74

Digitized by Google

Motor testing forms, recommended practice 36
notes on 36
Motor truck tires 107
discussion of 115
tractive factor for 122
wheels 264
Nickel chromium steel specifications 10
Nickel steel specifications 10
Nominating Committee, new method of designating 58
Non-glaring headlights 284
Notes on motor testing forms 36
Officers of the Society 340
One-piece clincher rims, European standardization 83, 101
One-wire system for gasoline automobiles 17, 18, 67, 158
not accepted as recommended practice 74
Overlap of threads 203
Oversize tires 30, 35, 76
Oxygen metal cutting 279
Piston displacement formula 36
Pistons, weight of 331
Pleasure Car Wheels Division, Second report of as accepted 25
discussion of 31, 74
Pneumatic gear-shifting 258
Pneumatic tire sizes 30, 32, 75
oversizes 35, 76
seat circumferences 82
seat diameters 82
Presidential address 49
Quick detachable rims 88, 101
Racing and its effect on manufacture 333
discussion of 340
Reading stand presentation by I. A. E. and S. M. M. T 55
Reflectors, headlight 286
Resiliency of solid tires 110
Rims, demountable 94, 97
demountable-detachable 98
routine test for pneumatic tire 25, 74
standardization 75, 80, 87, 100
test data 27
Ring and plug thread gages 198
Road-destructive effects of vehicles 175
Road resistance characteristics 176
Routine tests of rims for pneumatic tires 25, 74
test data 27
Rules of the Society, revised 361
Screw pitch gages 200
Screw stock specification 9

Digitized by Google

Sections Meetings papers 242
Sections of the Society 341
Shafts, four-splined 1, 64
Silico-manganese steel specification..... 15
Six-cylinder chassis for America 221
Six- versus four-cylinder motors 235
S. M. M. T. standard rims, pneumatic tire..... 80
discussion of 86
Solid rubber tires 107
Speed counters 39
Splined shafts, four- 1, 64
Standards Committee meeting..... 1
Starters, electric motor 149
discussion of 166
Starting-motor drive 153
Steel castings specification 9, 16
Steel specifications 7, 66
Student enrollment, Constitutional provision for 62
Stripped threads, causes of 194
Straight-side detachable rims 92
Tachometers 39
Tap drill sizes 194
for different materials 207
tables of 208
discussion of 210
Taper fittings, castle nut recommended practice.....4, 64
Tapped holes, depth of in different materials..... 207
Taps, factor of safety 206
Taxation of motor vehicles, engineering basis for..... 174
discussion on 192
Tellers of election of members, report of 55
Temperature measurements in motor testing.....41, 42
Temperature test of insulating materials.....17, 18
Testing pneumatic tire rims, recommended practice..... 25
Thermometers in motor testing 41
Thread gages 198
pitch gages 200
overlap of 203
Tire-mile cost of trucks 109
discussion of 115
Tire sizes, pneumatic 30, 32, 75
Tires, solid 107
Tolerance of pneumatic tire rims 80
Torque measurement 39, 43
Tractive factor of motor trucks..... 122
Tractive force characteristic curve 187
Transmissions, electric 129

Digitized by Google

Treasurer's report 55, 240
Two-wire system for gasoline automobiles 17, 18, 67, 158
Universal quick-detachable rims 93
Valve timing, Determining..... 38
Voltage of electric starting and lighting systems..... 150
Welding aluminum 276
autogenous 267, 270
blowpipe 268
brass 278
bronze 278
cast iron 275
copper 277
electric 267
hydrogen 269
malleable iron 276
speeds for 274
Wheels for motor trucks 264
Wiring systems for gasoline automobiles.....17, 18, 67, 158
Wood wheels for motor trucks 264

Digitized by Google

Digitized by Google

Digitized by Google

Digitized by Google

Digitized by Google

89055303614

b89055303614a

Digitized by Google

Digitized by Google

89055303614

b89055303614a

Digitized by Google